BROOKSIDE CULVERT REPLACEMENT PROJECT

LOCATED AT:
BROOKSIDE DRIVE
NEW LONDON, NH

PREPARED FOR & CURRENT OWNER:
TOWN OF NEW LONDON
184 SOUTH PLEASANT STREET

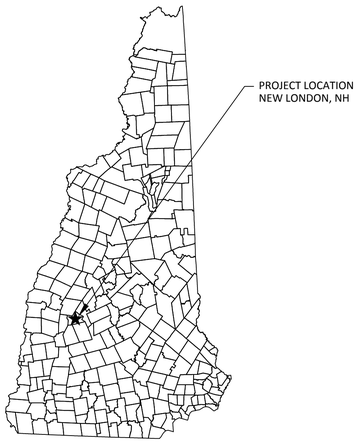

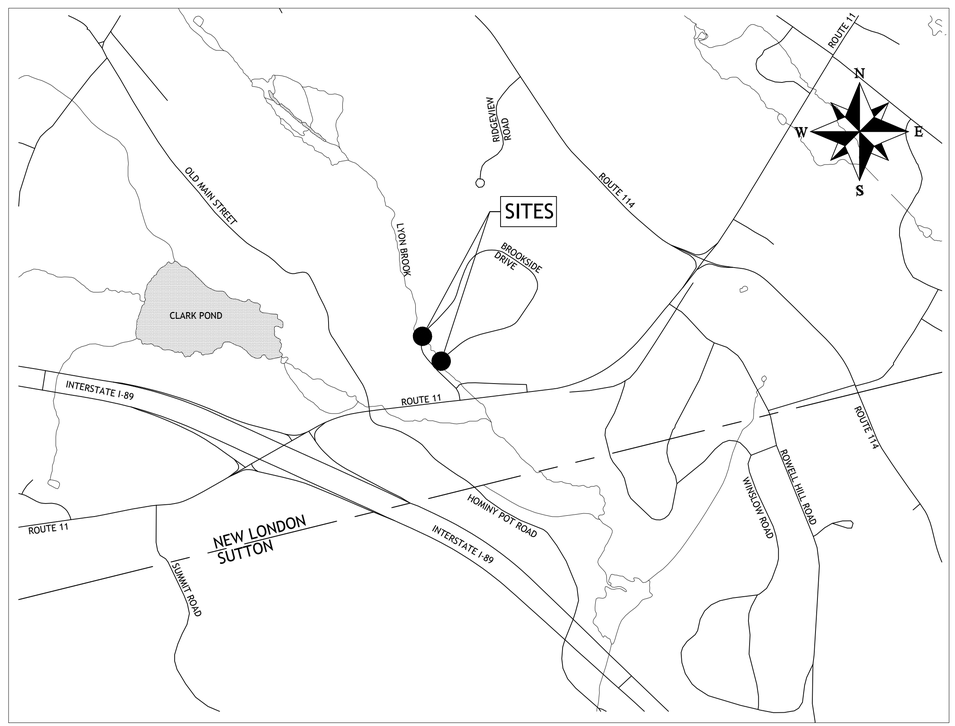

LOCUS PLAN

SCALE: 1" = 1000'

DESIGN ENGINEER:
CLD CONSULTING ENGINEERS, INC.
28 GATES STREET. SUITE 100
WHITE RIVER JCT. VT 05001

SURVEYOR:
RAY CRITCH, LLS
LAKE SUNAPEE SURVEY

PLAN INDEX

DWG#	SHEET NAME
-	TITLE SHEET
EX	EXISTING CONDITIONS OVERALL PLAN
EX#1	EXISTING CONDITIONS & CROSS SECTIONS SITE #1
EX#2	EXISTING CONDITIONS & CROSS SECTIONS SITE #2
SOIL	NRCS WEB SOIL SURVEY AND DRAINAGE AREA
PS#1	PROPOSED CONDITIONS & CROSS SECTIONS SITE #1
PS#2	PROPOSED CONDITIONS & CROSS SECTIONS SITE #2
WET	WETLAND IMPACT PLAN
D1	EROSION CONTROL NOTES & DETAILS
D2	ALUMINUM BOX CULVERT DETAILS
D3	ALUMINUM BOX CULVERT DETAILS
D4	CONSTRUCTION DETAILS

NH DES WETLAND PERMIT

REQUIRED STATE APPROVALS

	PERMIT #	DATE APPROVED	EXPIRATION DATE
NHDES WETLANDS			

15-0184 BROOKSIDE CULVERTS WETLAND SET.DWG

NO.	DATE	REVISION
2	9/30/16	MOD. EASEMENTS & FINAL PERMIT PLANS
1	4/20/16	ISSUED FOR PRELIMINARY BID OF SITE 1

DRAWN: CTN | DESIGNED: DLM | CHECKED: CIH | APPROVED: BAV

CLD CONSULTING ENGINEERS
28 Gates Street • Suite 100
White River Jct. VT 05001
(802) 698-0270 • Fax: 0795
(802) 698-4949
cld@cldengineers.com • www.cldengineers.com
Maine • New Hampshire • Vermont

CLIENT:
TOWN OF NEW LONDON
PUBLIC WORKS DEPARTMENT
184 SOUTH PLEASANT STREET
NEW LONDON, NH 03257

BROOKSIDE CULVERT
REPLACEMENT PROJECT
NEW LONDON
NEW HAMPSHIRE

SCALE:	PROJECT NO.
AS SHOWN	15-0184
DATE: JAN., 2016	DWG. NO. TITLE

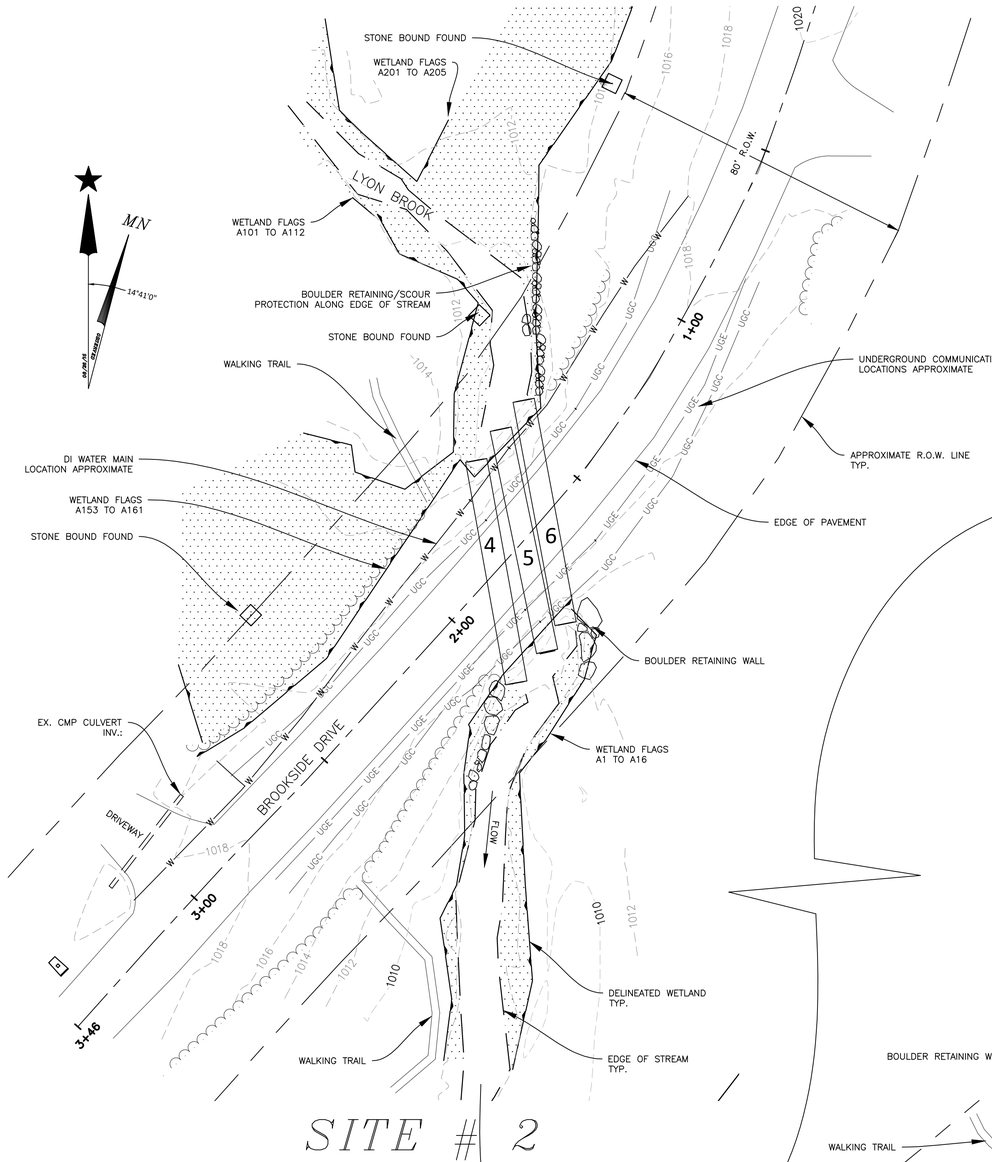

NOTES:

1. WETLANDS WERE DELINEATED FOR THE SITE DURING JULY OF 2015 BY JONATHAN SISSON, CWS #235 OF BEAVER TRACKS, LLC., 21 HALE HILL ROAD, SWANZEY, NH 03446 IN ACCORDANCE WITH ENV–WQ1014.3. WETLAND BOUNDARIES WERE FLAGGED IN THE FIELD AND LOCATIONS SURVEYED BY CLD CONSULTING ENGINEERS, INC..
2. TOPOGRAPHICAL INFORMATION IS BASED ON FIELD SURVEY PERFORMED BY CLD CONSULTING ENGINEERS, INC. (CLD) ON AUGUST 26, 2015 & SEPTEMBER 4, 2015. DATUM INFORMATION WAS GENERATED FROM GPS READINGS DURING THE SURVEY.
3. THE INTENT OF THIS PLAN IS TO SHOW EXISTING SITE CONDITIONS ALONG BROOKSIDE DRIVE IN NEW LONDON NEW HAMPSHIRE.
4. THE EXISTING RIGHT–OF–WAY LINES ALONG BROOKSIDE DRIVE HAVE YET TO BE CONFIRMED AND AS SUCH SHALL BE CONSIDERED APPROXIMATE.
5. CLD HAS NOT PERFORMED ANY BOUNDARY OR TOPOGRAPHIC SURVEYS. NO PROPERTY LINES, EASEMENTS AND OTHER REAL PROPERTY DESCRIPTIONS ARE SHOWN ON THIS PLAN AND THIS PLAN DOES NOT DEFINE LEGAL RIGHTS OR MEET LEGAL REQUIREMENTS FOR A LAND SURVEY AS DESCRIBED IN NH STATUTES, AND SHALL NOT BE USED AS THE BASIS OF ANY LAND TRANSFER OR ESTABLISHMENT OF ANY PROPERTY RIGHT.
6. UTILITIES SHOWN DO NOT PURPORT TO CONSTITUTE OR REPRESENT ALL UTILITIES LOCATED UPON OR ADJACENT TO THE SURVEYED PREMISES. EXISTING UTILITY LOCATIONS ARE APPROXIMATE ONLY. THE CONTRACTOR SHALL FIELD VERIFY ALL UTILITY LOCATIONS. ALL DISCREPANCIES SHALL BE REPORTED TO THE TOWN AND ENGINEER.
7. AFFECTED SECTIONS OF BROOKSIDE DRIVE SHALL BE CLOSED TO THROUGH TRAFFIC DURING CONSTRUCTION. SITE #1 CONSTRUCTION SHALL TAKE PLACE NON–CONCURENTLY WITH SITE #2. THE CONTRACTOR SHALL SUBMIT A TRAFFIC CONTROL PLAN WITH PROPOSED SIGN PLACEMENT AND DETOUR ROUTES TO THE ENGINEER AND TOWN PRIOR TO CONSTRUCTION.
8. THE CONTRACTOR SHALL CONTACT DIG SAFE (888–344–7233) A MINIMUM OF AT LEAST 3 BUSINESS DAYS (72 WORKING HOURS) PRIOR TO ANY CONSTRUCTION.

EXISTING CONDITIONS PLAN KEY

- SIGN
- FIRE HYDRANT
- WATER VALVE
- ELECT./COMM. STRUCTURE
- PIPE DESTINATION UNKNOWN
- BENCHMARK REFERENCE
- SURVEY REFERENCE STATION
- EDGE OF TREELINE
- EDGE OF PAVEMENT
- CONTOURS – 2' INTERVAL
- WATER LINE
- CULVERT
- UNDERGROUND COMMUNICATIONS
- UNDERGROUND ELECTRIC
- DELINEATED WETLANDS
- STONE BOUND FOUND

PIPE #	INV. IN	INV. OUT	T.O.P. IN	T.O.P. OUT	STREAM BED ELEV. IN	STREAM BED ELEV. OUT
1	1001.80	1001.34	1006.29	1005.24	1001.00	1000.68
2	1001.88	1001.10	1006.47	1005.21	1001.00	1000.68
3	1001.77	1001.26	1005.66	1005.54	1001.00	1000.68
4	1009.90	1008.69	1013.54	1012.66	1009.13	1008.20
5	1009.22	1008.63	1013.03	1012.50	1009.30	1008.20
6	1009.47	1008.79	1013.15	1012.78	1009.13	1008.20

ALL ELEVATIONS IN FEET

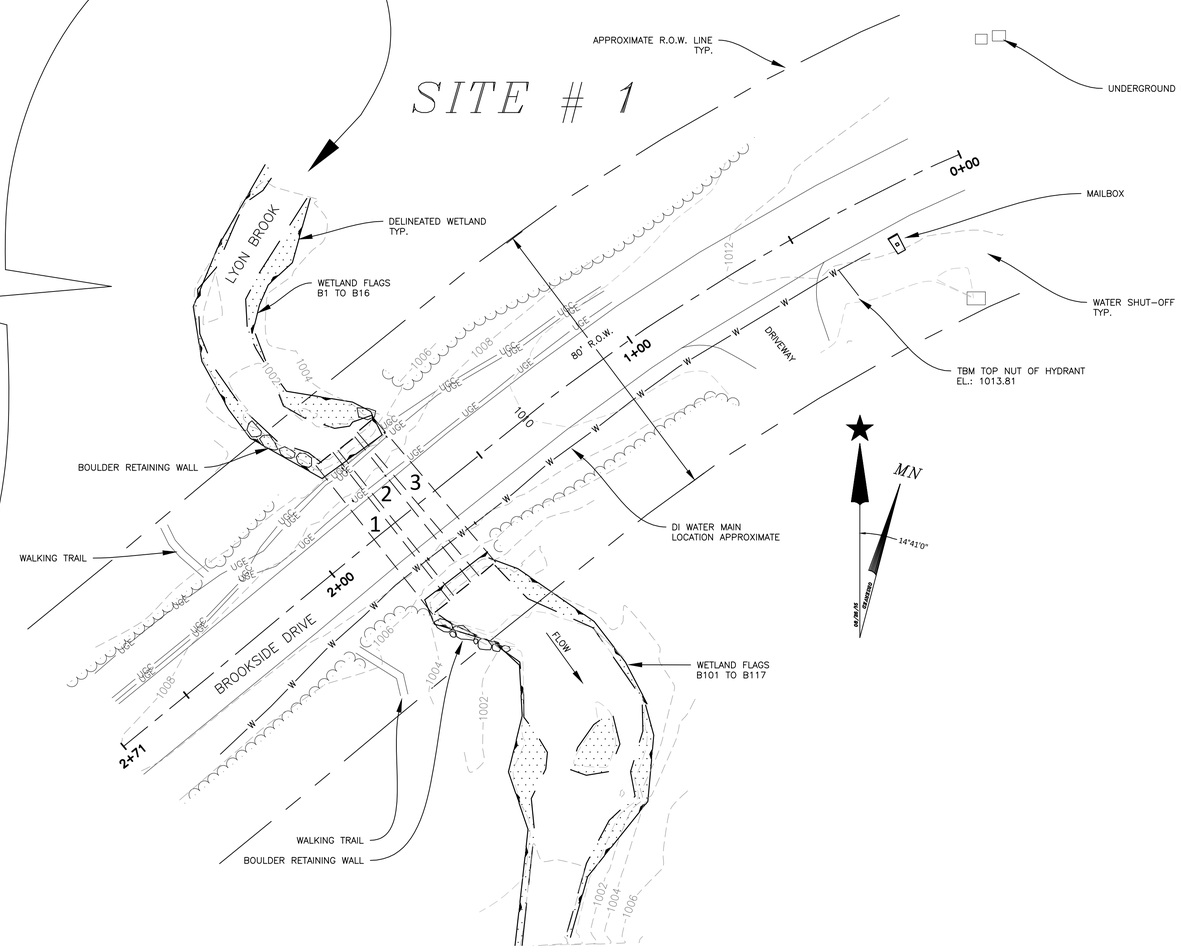

DIG SAFE — ME NH VT — CALL 1-888-DIG-SAFE TOLL FREE — UCI, LLC. UNDER GROUND PLANT DAMAGE PREVENTION SYSTEM

CONTACT DIG SAFE 72 HOURS PRIOR TO CONSTRUCTION

THE LOCATION OF ANY UTILITY INFORMATION SHOWN ON THIS PLAN IS APPROXIMATE. CLD ENG. INC. MAKES NO CLAIM TO THE ACCURACY OR COMPLETENESS OF UTILITIES SHOWN. 72 HOURS PRIOR TO ANY EXCAVATION ON SITE, THE CONTRACTOR SHALL CONTACT DIG–SAFE AT 1–888–DIG–SAFE.

GRAPHIC SCALE

20 0 10 20 40 80

(IN FEET)
1 inch = 20 feet.

NO.	DATE	REVISION
2	9/30/16	MOD. EASEMENTS & FINAL PERMIT PLANS
1	4/20/16	ISSUED FOR PRELIMINARY BID OF SITE 1

DRAWN: CTN | DESIGNED: DLM | CHECKED: CIH | APPROVED: BAV

CLD CONSULTING ENGINEERS
28 Gates Street • Suite 100
White River Jct., VT 05001
(802) 674-5970 • Fax: 674-5965
(802) 884-1970 • Fax: 877-885-4949
cld@cldengineers.com • www.cldengineers.com
Maine • New Hampshire • Vermont

CLIENT:
TOWN OF NEW LONDON
PUBLIC WORKS DEPARTMENT
184 SOUTH PLEASANT STREET
NEW LONDON, NH 03257

BROOKSIDE CULVERT REPLACEMENT PROJECT
NEW LONDON
NEW HAMPSHIRE
EXISTING CONDITIONS OVERALL PLAN

SCALE:	PROJECT NO.
AS SHOWN	15–0184
DATE: JAN., 2016	DWG. NO. EX

15–0184 BROOKSIDE CULVERTS WETLAND SET.DWG

SITE # 1

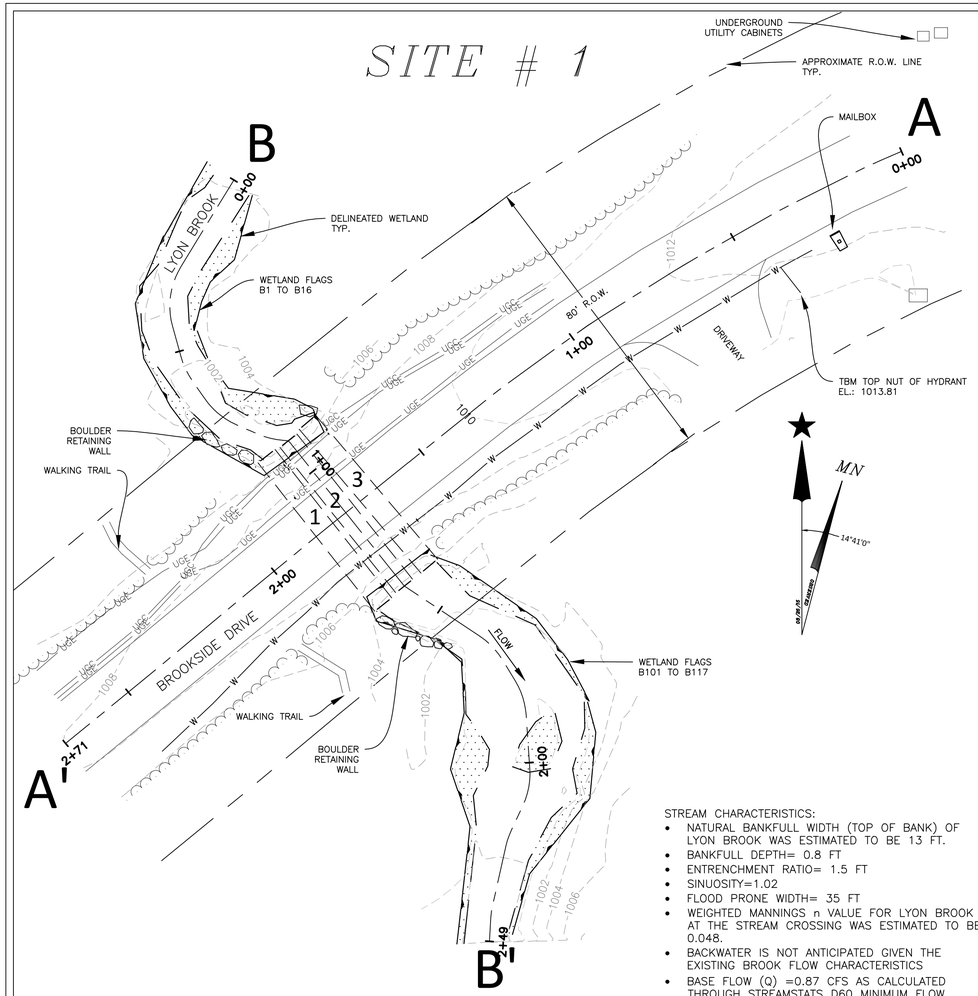

NOTES:

1. WETLANDS WERE DELINEATED FOR THE SITE DURING JULY OF 2015 BY JONATHAN SISSON, CWS #235 OF BEAVER TRACKS, LLC., 21 HALE HILL ROAD, SWANZEY, NH 03446 IN ACCORDANCE WITH ENV-WQ1014.3. WETLAND BOUNDARIES WERE FLAGGED IN THE FIELD AND LOCATIONS SURVEYED BY CLD CONSULTING ENGINEERS, INC..
2. TOPOGRAPHICAL INFORMATION IS BASED ON FIELD SURVEY PERFORMED BY CLD CONSULTING ENGINEERS, INC. (CLD) ON AUGUST 26, 2015 & SEPTEMBER 4, 2015. DATUM INFORMATION WAS GENERATED FROM GPS READINGS DURING THE SURVEY.
3. THE INTENT OF THIS PLAN IS TO SHOW EXISTING SITE CONDITIONS ALONG BROOKSIDE DRIVE IN NEW LONDON NEW HAMPSHIRE.
4. THE EXISTING RIGHT-OF-WAY LINES ALONG BROOKSIDE DRIVE HAVE YET TO BE CONFIRMED AND AS SUCH SHALL BE CONSIDERED APPROXIMATE.
5. CLD HAS NOT PERFORMED ANY BOUNDARY OR TOPOGRAPHIC SURVEYS. NO PROPERTY LINES, EASEMENTS AND OTHER REAL PROPERTY DESCRIPTIONS ARE SHOWN ON THIS PLAN AND THIS PLAN DOES NOT DEFINE LEGAL RIGHTS OR MEET LEGAL REQUIREMENTS FOR A LAND SURVEY AS DESCRIBED IN NH STATUTES, AND SHALL NOT BE USED AS THE BASIS OF ANY LAND TRANSFER OR ESTABLISHMENT OF ANY PROPERTY RIGHT.
6. UTILITIES SHOWN DO NOT PURPORT TO CONSTITUTE OR REPRESENT ALL UTILITIES LOCATED UPON OR ADJACENT TO THE SURVEYED PREMISES. EXISTING UTILITY LOCATIONS ARE APPROXIMATE ONLY. THE CONTRACTOR SHALL FIELD VERIFY ALL UTILITY LOCATIONS. ALL DISCREPANCIES SHALL BE REPORTED TO THE TOWN AND ENGINEER.
7. AFFECTED SECTIONS OF BROOKSIDE DRIVE SHALL BE CLOSED TO THROUGH TRAFFIC DURING CONSTRUCTION. SITE #1 CONSTRUCTION SHALL TAKE PLACE NON-CONCURENTLY WITH SITE #2. THE CONTRACTOR SHALL SUBMIT A TRAFFIC CONTROL PLAN WITH PROPOSED SIGN PLACEMENT AND DETOUR ROUTES TO THE ENGINEER AND TOWN PRIOR TO CONSTRUCTION.
8. THE CONTRACTOR SHALL CONTACT DIG SAFE (888-344-7233) A MINIMUM OF AT LEAST 3 BUSINESS DAYS (72 WORKING HOURS) PRIOR TO ANY CONSTRUCTION.

PIPE #	INV. IN	INV. OUT	T.O.P. IN	T.O.P. OUT	STREAM BED ELEV. IN	STREAM BED ELEV. OUT
1	1001.80	1001.34	1006.29	1005.24	1001.00	1000.68
2	1001.88	1001.10	1006.47	1005.21	1001.00	1000.68
3	1001.77	1001.26	1005.66	1005.54	1001.00	1000.68

ALL ELEVATIONS IN FEET

EXISTING CONDITIONS PLAN KEY

- SIGN
- FIRE HYDRANT
- WATER VALVE
- ELECT./COMM. STRUCTURE
- PIPE DESTINATION UNKNOWN
- BENCHMARK REFERENCE
- SURVEY REFERENCE STATION
- EDGE OF TREELINE
- EDGE OF PAVEMENT
- 100 — CONTOURS – 2' INTERVAL
- W — W — WATER LINE
- CULVERT
- UGC — UGC — UNDERGROUND COMM
- UGE — UGE — UNDERGROUND ELECTRIC
- DELINEATED WETLANDS
- STONE BOUND FOUND

STREAM CHARACTERISTICS:

- NATURAL BANKFULL WIDTH (TOP OF BANK) OF LYON BROOK WAS ESTIMATED TO BE 13 FT.
- BANKFULL DEPTH= 0.8 FT
- ENTRENCHMENT RATIO= 1.5 FT
- SINUOSITY=1.02
- FLOOD PRONE WIDTH= 35 FT
- WEIGHTED MANNINGS n VALUE FOR LYON BROOK AT THE STREAM CROSSING WAS ESTIMATED TO BE 0.048.
- BACKWATER IS NOT ANTICIPATED GIVEN THE EXISTING BROOK FLOW CHARACTERISTICS
- BASE FLOW (Q) =0.87 CFS AS CALCULATED THROUGH STREAMSTATS D60 MINIMUM FLOW CHARACTERISTIC

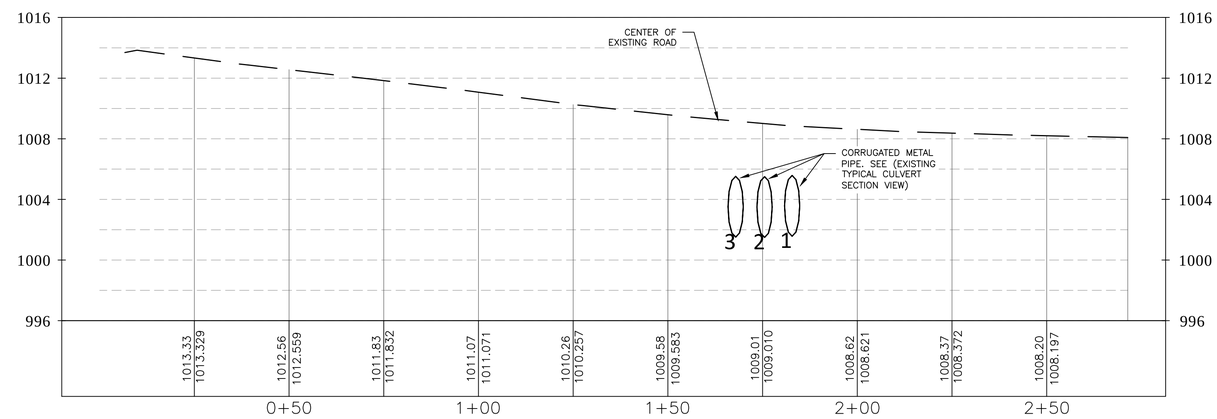

A - A'

Site#1 Culvert (Road Center Line)

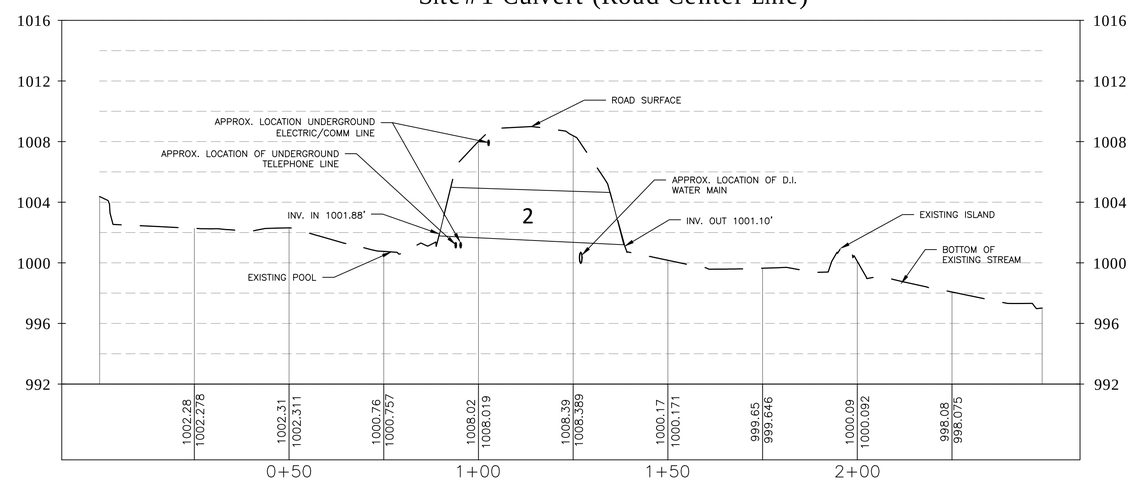

B - B'

Lyon Brook. Site#1 (Stream Center Line)

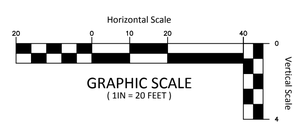

EXISTING TYPICAL CULVERT SECTION VIEW

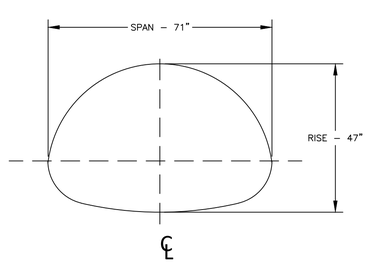

PIPE ARCH DIMENSIONS (2 ⅔" x ½" CORRUGATION)			
EQUIV. DIAMETER	SPAN	RISE	WATERWAY AREA
IN.	IN.	IN.	FT^2
60	71	47	18.1

NO.	DATE	REVISION	DRAWN:	DESIGNED:	CHECKED:	APPROVED:
2	9/30/16	MOD. EASEMENTS & FINAL PERMIT PLANS	CTN	DLM	CIH	BAV
1	4/20/16	ISSUED FOR PRELIMINARY BID OF SITE 1				

CLD CONSULTING ENGINEERS
28 Gates Street • Suite 100
White River Jct., VT 05001
(802) 674-8070 • Fax: 277-0565
(802) 649-5999 • www.cldengineers.com
cld@cldengineers.com • www.cldengineers.com
Maine • New Hampshire • Vermont

CLIENT:
TOWN OF NEW LONDON
PUBLIC WORKS DEPARTMENT
184 SOUTH PLEASANT STREET
NEW LONDON, NH 03257

BROOKSIDE CULVERT REPLACEMENT PROJECT
NEW LONDON
NEW HAMPSHIRE

EXISTING CONDITIONS & CROSS SECTIONS SITE #1

SCALE:	PROJECT NO.
AS SHOWN	15-0184
DATE:	DWG. NO.
JAN., 2016	EX#1

15-0184 BROOKSIDE CULVERTS WETLAND SET.DWG

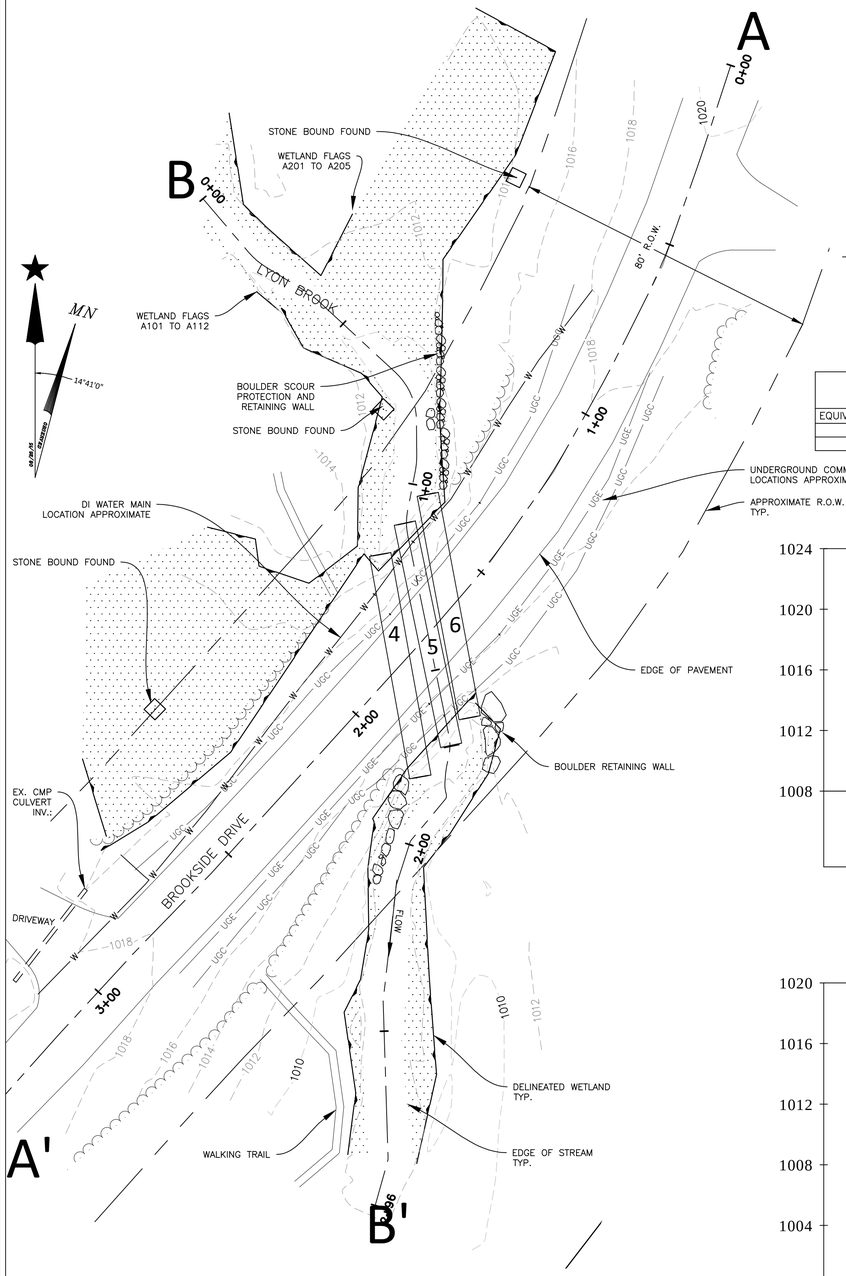

SITE # 2

Horizontal Scale

GRAPHIC SCALE
(1IN = 20 FEET)

Vertical Scale

EXISTING TYPICAL CULVERT SECTION VIEW

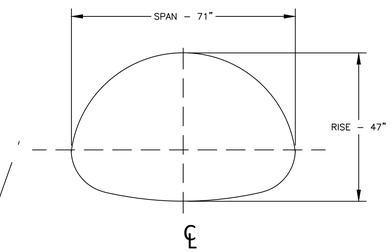

PIPE ARCH DIMENSIONS (2 ⅔" x ½" CORRUGTATION)			
EQUIV. DIAMETER	SPAN	RISE	WATERWAY AREA
IN.	IN.	IN.	FT^2
60	71	47	18.1

PLAN NOTES:

1. REFER TO SHEET EX#1 FOR PLAN NOTES

STREAM CHARACTERISTICS:

- NATURAL BANKFULL WIDTH (TOP OF BANK) OF LYON BROOK WAS ESTIMATED TO BE 13 FT.
- BANKFULL DEPTH= 0.8 FT
- ENTRENCHMENT RATIO= 1.5 FT
- SINUOSITY=1.02
- FLOOD PRONE WIDTH= 35 FT
- WEIGHTED MANNINGS n VALUE FOR LYON BROOK AT THE STREAM CROSSING WAS ESTIMATED TO BE 0.048.
- BACKWATER IS NOT ANTICIPATED GIVEN THE EXISTING BROOK FLOW CHARACTERISTICS
- BASE FLOW (Q) =0.87 CFS AS CALCULATED THROUGH STREAMSTATS D60 MINIMUM FLOW CHARACTERISTIC

PIPE #	INV. IN	INV. OUT	T.O.P. IN	T.O.P. OUT	STREAM BED ELEV. IN	STREAM BED ELEV. OUT
4	1009.90	1008.69	1013.54	1012.66	1009.13	1008.20
5	1009.22	1008.63	1013.03	1012.50	1009.30	1008.20
6	1009.47	1008.79	1013.15	1012.78	1009.13	1008.20

ALL ELEVATIONS IN FEET

EXISTING CONDITIONS PLAN KEY

- SIGN
- FIRE HYDRANT
- WATER VALVE
- ELECT./COMM. STRUCTURE
- PIPE DESTINATION UNKNOWN
- BENCHMARK REFERENCE
- SURVEY REFERENCE STATION
- EDGE OF TREELINE
- EDGE OF PAVEMENT
- 100 CONTOURS – 2' INTERVAL
- W W WATER LINE
- CULVERT
- UGC UGC UNDERGROUND COMMUNICATIONS
- UGE UGE UNDERGROUND ELECTRIC
- DELINEATED WETLANDS
- STONE BOUND FOUND

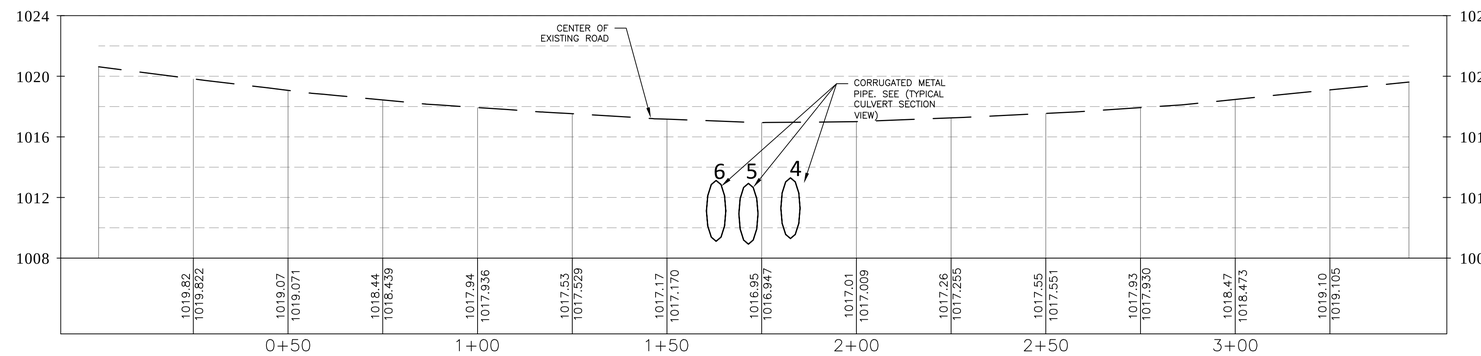

A - A'

Site # 2 - (Road Center Line)

EXISTING BRIDGE PROFILE
SCALE: H: 1"=20'
V: 1"=4'

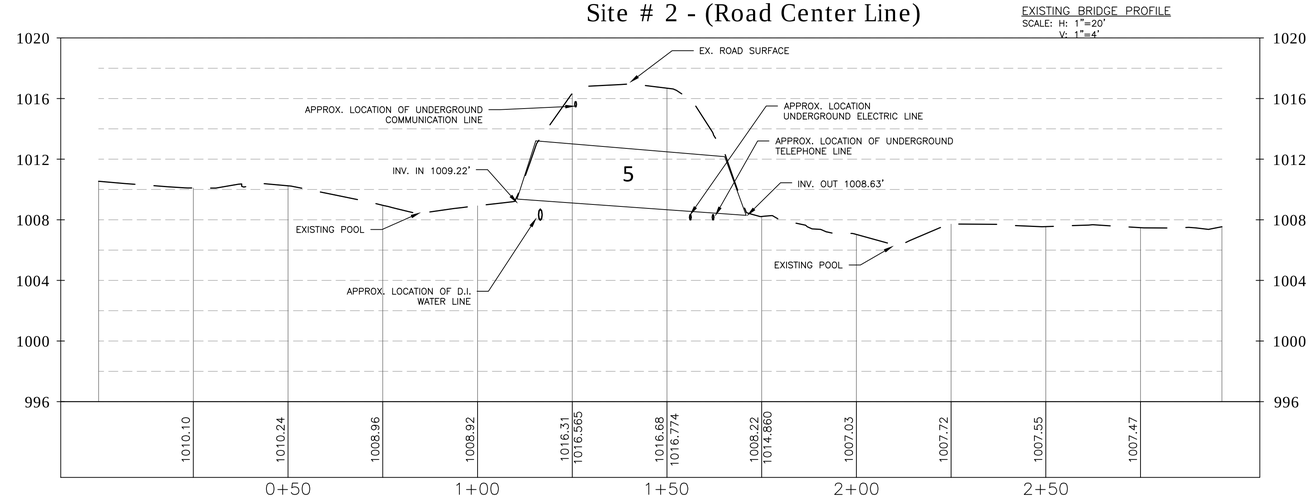

B - B'

Site # 2 (Stream Center Line)

EXISTING BRIDGE PROFILE
SCALE: H: 1"=20'
V: 1"=4'

15–0184 BROOKSIDE CULVERTS WETLAND SET.DWG

NO.	DATE	REVISION
2	9/30/16	MOD. EASEMENTS & FINAL PERMIT PLANS
1	4/20/16	ISSUED FOR PRELIMINARY BID OF SITE 1

DRAWN: CTN | DESIGNED: DLM | CHECKED: CIH | APPROVED: BAV

CONSULTING ENGINEERS
28 Gates Street • Suite 100
White River Jct. VT 05001
(802) 296-2499 • Fax: 877-815-5949
cld@cldengineers.com • www.cldengineers.com
Maine • New Hampshire • Vermont

CLIENT:
TOWN OF NEW LONDON
PUBLIC WORKS DEPARTMENT
184 SOUTH PLEASANT STREET
NEW LONDON, NH 03257

BROOKSIDE CULVERT REPLACEMENT PROJECT
NEW LONDON
NEW HAMPSHIRE

EXISTING CONDITIONS & CROSS SECTIONS SITE #2

SCALE:	PROJECT NO.
AS SHOWN	15–0184
DATE:	DWG. NO.
JAN., 2016	EX#2

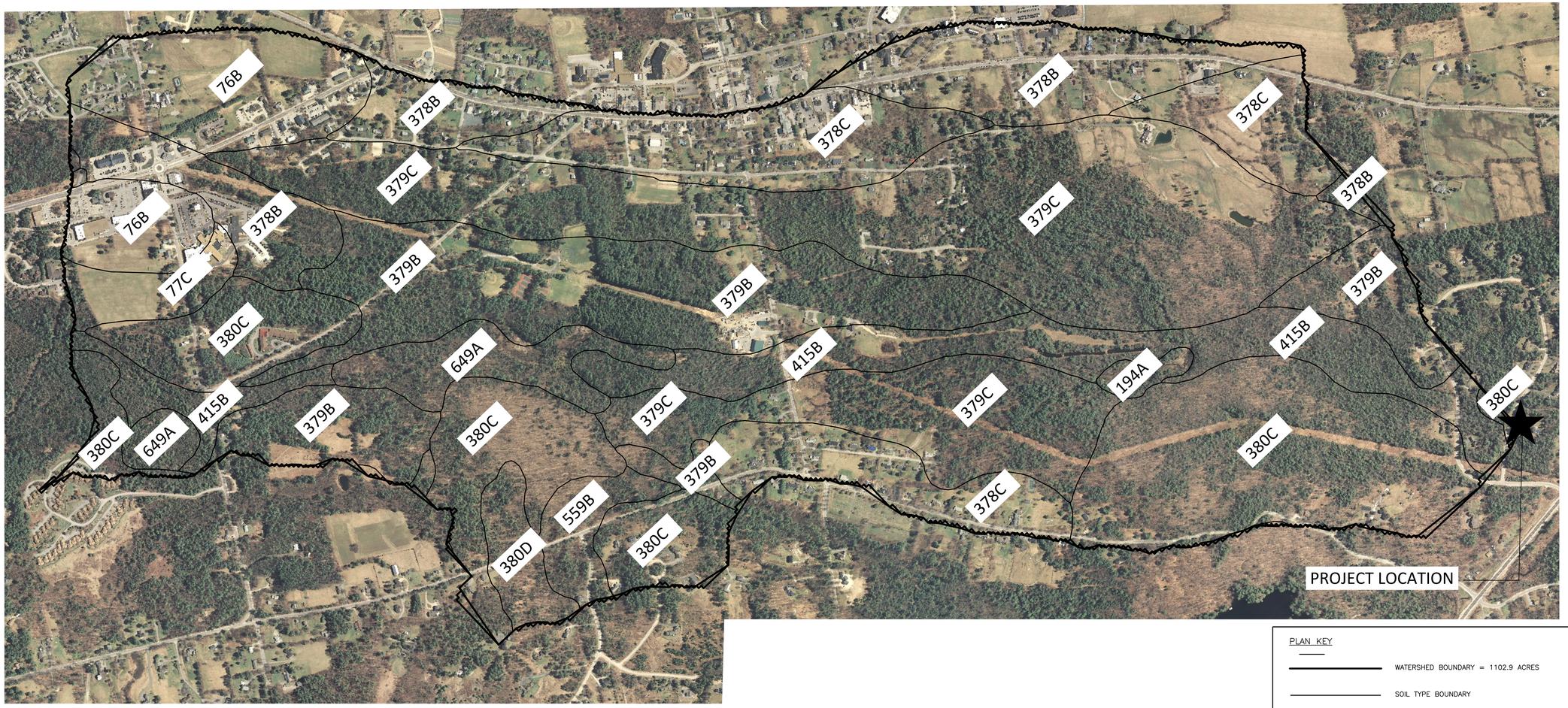

Merrimack and Belknap Counties, New Hampshire (NH609)			
Map Unit Symbol	**Map Unit Name**	**Acres in AOI**	**Percent of AOI**
76B	Marlow fine sandy loam, 3 to 8 percent slopes	72.1	6.5%
77C	Marlow fine sandy loam, 8 to 15 percent slopes, very stony	16.7	1.5%
194A	Catden mucky peat, 0 to 1 percent slopes, ponded	4.6	0.4%
378B	Peru fine sandy loam, 3 to 8 percent slopes	106.8	9.7%
378C	Peru fine sandy loam, 8 to 15 percent slopes	117.5	10.7%
379B	Peru fine sandy loam, 0 to 8 percent slopes, very stony	165.1	15.0%
379C	Peru fine sandy loam, 8 to 15 percent slopes, very stony	271.1	24.6%
380C	Tunbridge-Lyman-Becket complex, 8 to 15 percent slopes, very stony	201.3	18.3%
380D	Tunbridge-Lyman-Becket complex, 15 to 25 percent slopes, very stony	14.7	1.3%
415B	Moosilauke fine sandy loam, 3 to 8 percent slopes, very stony	83.5	7.6%
559B	Skerry fine sandy loam, 3 to 8 percent slopes, very stony	15.3	1.4%
647B	Pillsbury fine sandy loam, 0 to 8 percent slopes, very stony	0.7	0.1%
649A	Peacham mucky peat, 0 to 8 percent slopes, very stony	33.4	3.0%
Totals for Area of Interest		**1,102.9**	**100.0%**

PLAN KEY

WATERSHED BOUNDARY = 1102.9 ACRES

SOIL TYPE BOUNDARY

378C SOIL TYPE MAP UNIT SYMBOL

GRAPHIC SCALE

500 0 250 500 1000 2000

(IN FEET)
1 inch = 500 feet.

15-0184 BROOKSIDE CULVERTS WETLAND SET.DWG

NO.	DATE	REVISION
2	9/30/16	MOD. EASEMENTS & FINAL PERMIT PLANS
1	4/20/16	ISSUED FOR PRELIMINARY BID OF SITE 1

DRAWN: CTN | DESIGNED: DLM | CHECKED: CIH | APPROVED: BAV

CONSULTING ENGINEERS
28 Gates Street • Suite 100
White River Jct., VT 05001
(802) 296-2835 • Fax: (802) 296-2835
(800) 639-7976
cld@cdengineers.com • www.cdengineers.com
Maine • New Hampshire • Vermont

CLIENT:
TOWN OF NEW LONDON
PUBLIC WORKS DEPARTMENT
184 SOUTH PLEASANT STREET
NEW LONDON, NH 03257

BROOKSIDE CULVERT
REPLACEMENT PROJECT
NEW LONDON
NEW HAMPSHIRE

NRCS WEB SOIL SURVEY
AND DRAINAGE AREA

SCALE:	PROJECT NO.
1"=500'	15-0184
DATE:	DWG. NO.
JAN., 2016	SOIL

SITE # 1

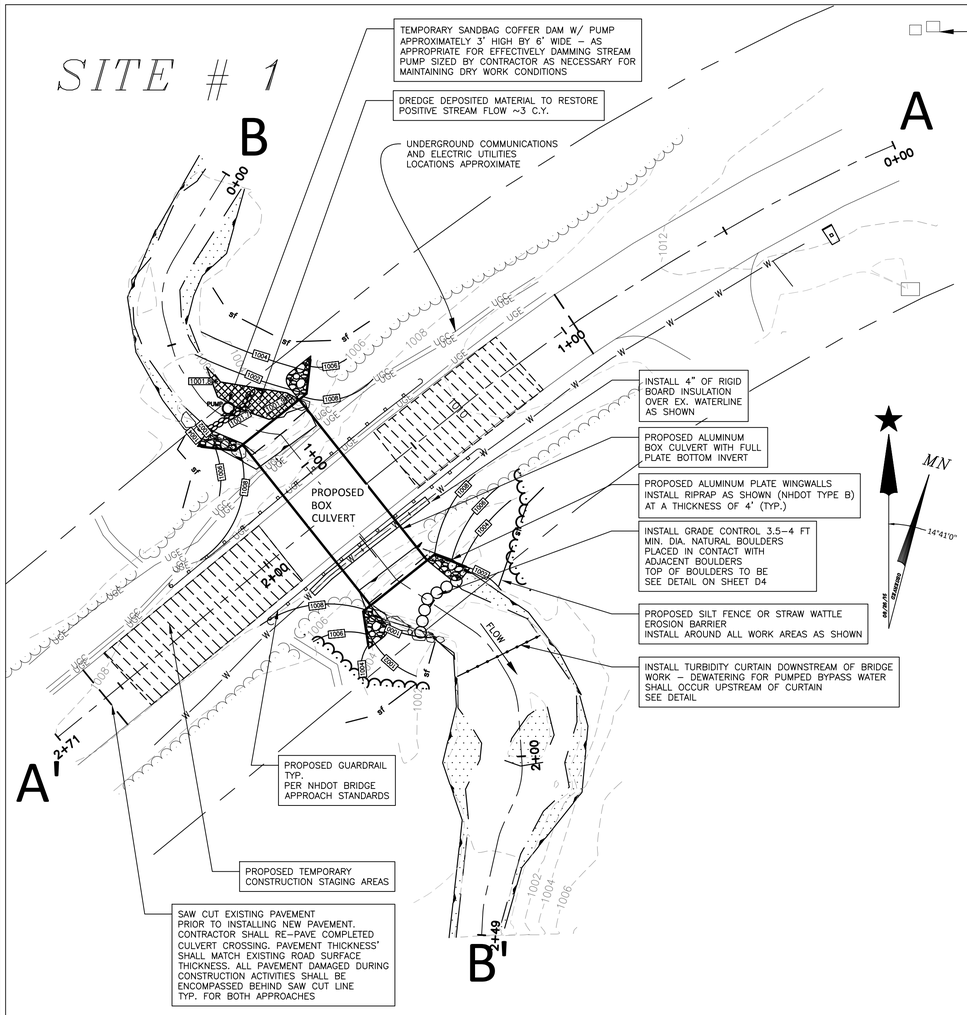

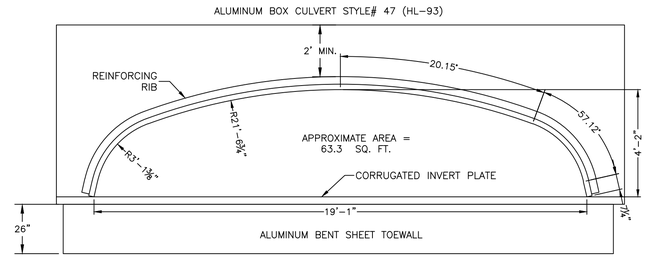

ALUMINUM BOX CULVERT SECTION VIEW

N.T.S.

BOX CULVERT DIMENSIONS (2 2/3" x 1/2" CORRUGATIONS)			
LENGTH	SPAN "A"	RISE "B"	WATERWAY AREA
FT.	FT.	FT.	FT^2
54.24	19.08	4.16	63.3

PLAN KEY

- SIGN
- FIRE HYDRANT
- WATER VALVE
- ELECT./COMM. STRUCTURE
- PIPE DESTINATION UNKNOWN
- BENCHMARK REFERENCE
- SURVEY REFERENCE STATION
- EDGE OF TREELINE
- EDGE OF PAVEMENT
- CONTOURS – 1' INTERVAL
- WATER LINE
- CULVERT
- UNDERGROUND COMM
- UNDERGROUND ELECTRIC
- DELINEATED WETLANDS
- STONE BOUND FOUND
- NHDOT TYPE B RIPRAP

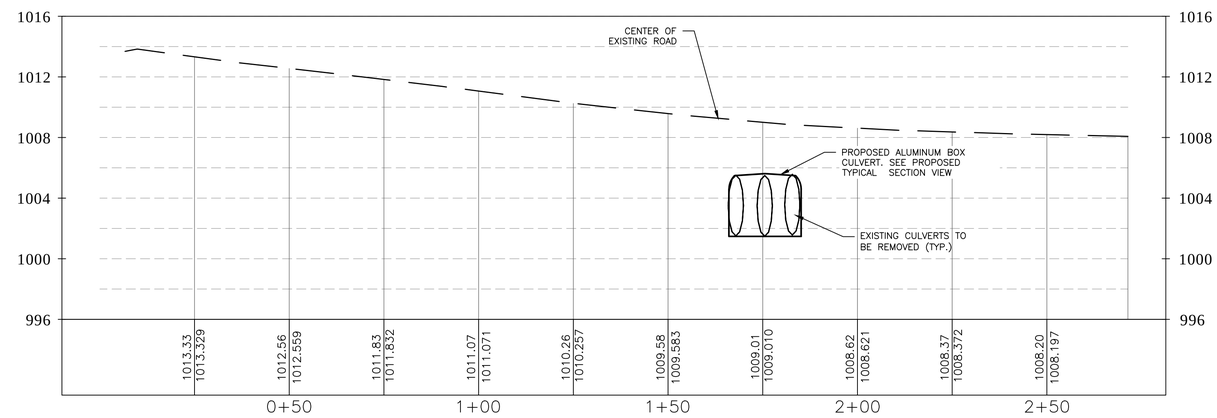

A - A'

Site#1 Culvert (Road Center Line)

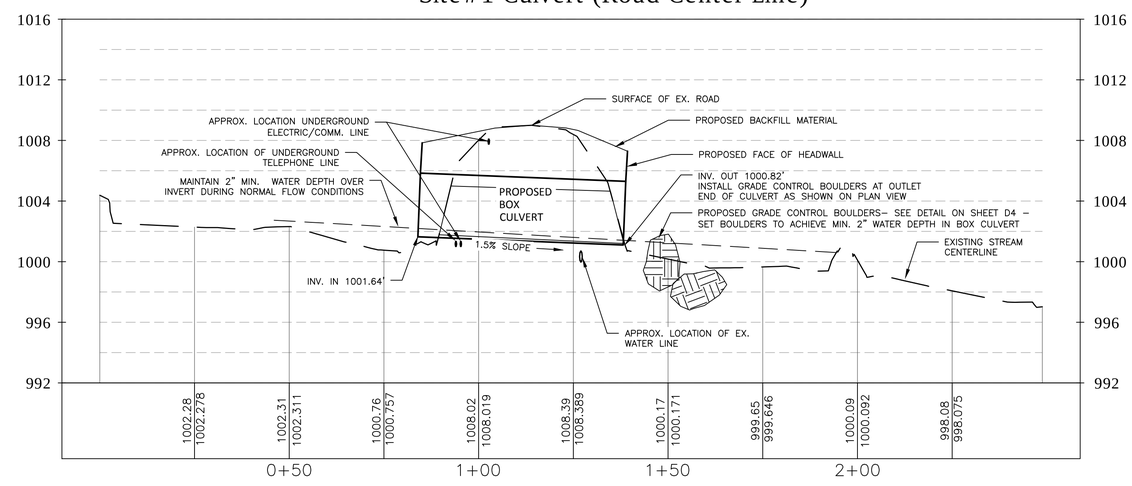

B - B'

Lyon Brook. Site#1 (Stream Center Line)

PROPOSED TYPICAL CULVERT - Full Aluminum Plate Invert

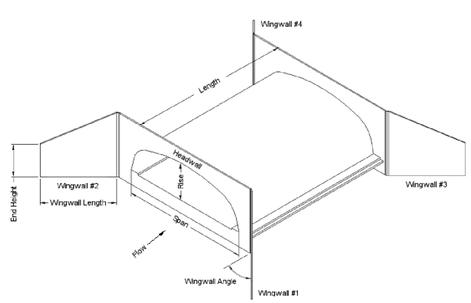

NTS

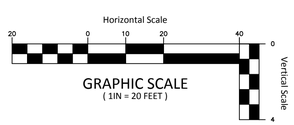

NO.	DATE	REVISION
2	9/30/16	MOD. EASEMENTS & FINAL PERMIT PLANS
1	4/20/16	ISSUED FOR PRELIMINARY BID OF SITE 1

DRAWN: CTN | DESIGNED: DLM | CHECKED: CIH | APPROVED: BAV

CONSULTING ENGINEERS
28 Gates Street • Suite 100
White River Jct., VT 05001
(802) 296-2499 • Fax: (802) 296-2405
cld@cldengineers.com • www.cldengineers.com
Maine • New Hampshire • Vermont

CLIENT:
TOWN OF NEW LONDON
PUBLIC WORKS DEPARTMENT
184 SOUTH PLEASANT STREET
NEW LONDON, NH 03257

BROOKSIDE CULVERT REPLACEMENT PROJECT
NEW LONDON
NEW HAMPSHIRE
PROPOSED CONDITIONS & CROSS SECTIONS
SITE #1

SCALE:	PROJECT NO.
AS SHOWN	15–0184
DATE: JAN., 2016	DWG. NO. PS#1

15–0184 BROOKSIDE CULVERTS WETLAND SET.DWG

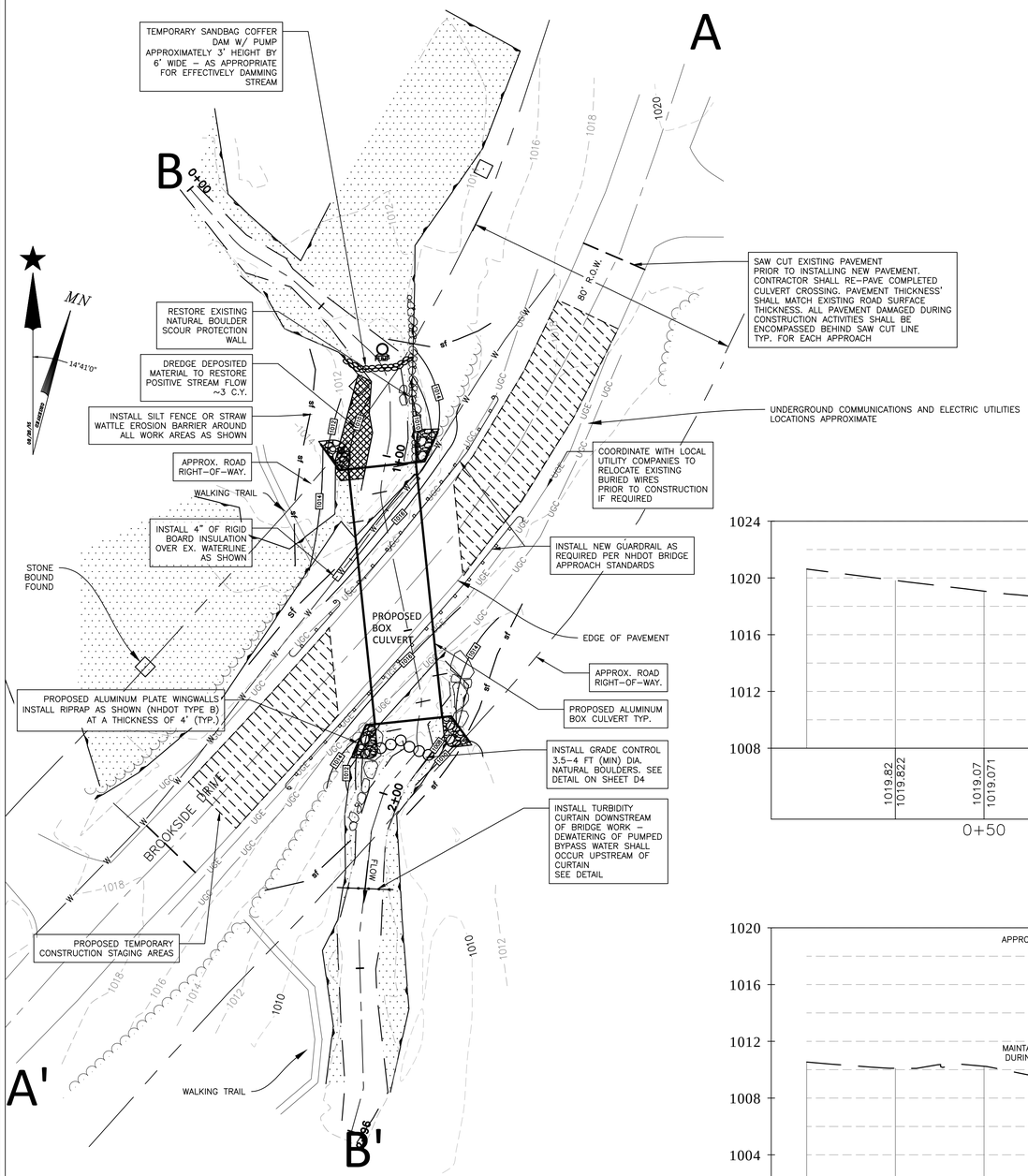

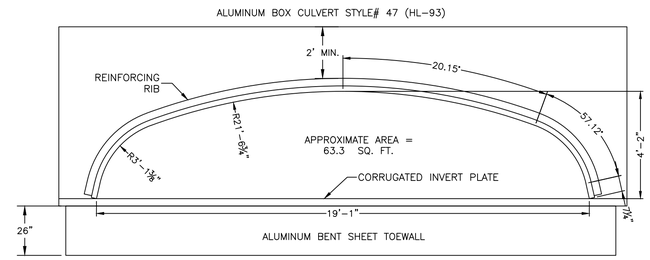

ALUMINUM BOX CULVERT SECTION VIEW

N.T.S.

BOX CULVERT DIMENSIONS (2 2/3" x 1/2" CORRUGATIONS)			
LENGTH	SPAN "A"	RISE "B"	WATERWAY AREA
FT.	FT	FT	FT^2
72.25	19.08	4.16	63.30

PLAN KEY

- SIGN
- FIRE HYDRANT
- WATER VALVE
- ELECT./COMM. STRUCTURE
- PIPE DESTINATION UNKNOWN
- BENCHMARK REFERENCE
- SURVEY REFERENCE STATION
- EDGE OF TREELINE
- EDGE OF PAVEMENT
- CONTOURS – 1' INTERVAL
- WATER LINE
- CULVERT
- UNDERGROUND COMM
- UNDERGROUND ELECTRIC
- DELINEATED WETLANDS
- STONE BOUND FOUND
- NHDOT TYPE B RIPRAP

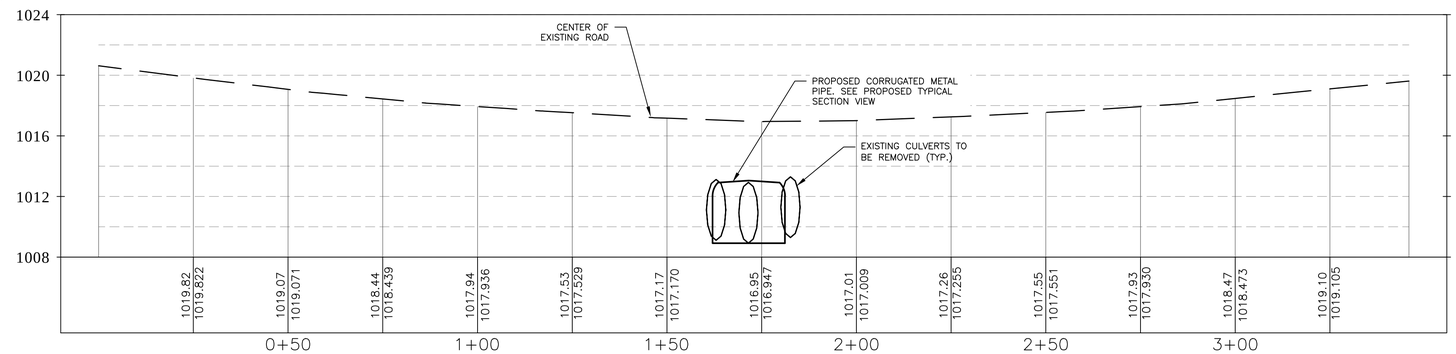

A - A'

Site # 2 - (Road Center Line)

PROPOSED CULVERT PROFILE
SCALE: H: 1"=20'
V: 1"=5'

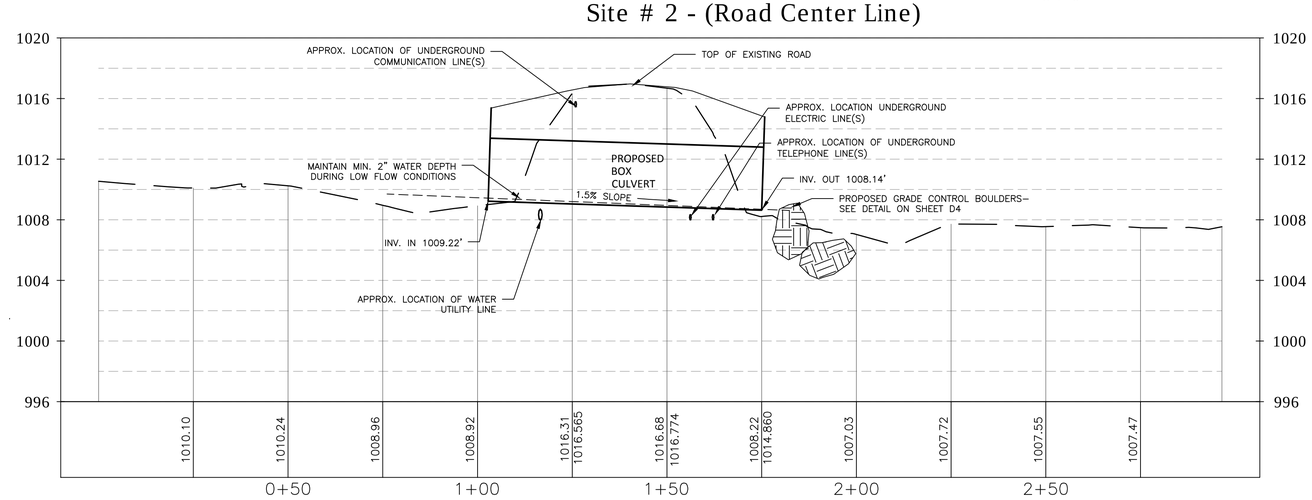

B - B'

Site # 2 (Stream Center Line)

EXISTING BRIDGE PROFILE
SCALE: H: 1"=20'
V: 1"=4'

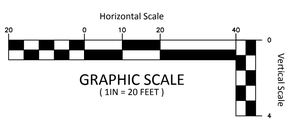

NO.	DATE	REVISION
2	9/30/16	MOD. EASEMENTS & FINAL PERMIT PLANS
1	4/20/16	ISSUED FOR PRELIMINARY BID OF SITE 1

DRAWN: CTN | DESIGNED: DLM | CHECKED: CIH | APPROVED: BAV

CONSULTING ENGINEERS
28 Gates Street • Suite 100
White River Jct. VT 05001
(802) 649-1005 • Fax 649-0795
cld@cldengineers.com • www.cldengineers.com
Maine • New Hampshire • Vermont

CLIENT:
TOWN OF NEW LONDON
PUBLIC WORKS DEPARTMENT
184 SOUTH PLEASANT STREET
NEW LONDON, NH 03257

BROOKSIDE CULVERT REPLACEMENT PROJECT
NEW LONDON
NEW HAMPSHIRE
PROPOSED CONDITIONS & CROSS SECTIONS
SITE #2

SCALE:	PROJECT NO.
AS SHOWN	15–0184
DATE: JAN., 2016	DWG. NO. PS#2

15–0184 BROOKSIDE CULVERTS WETLAND SET.DWG

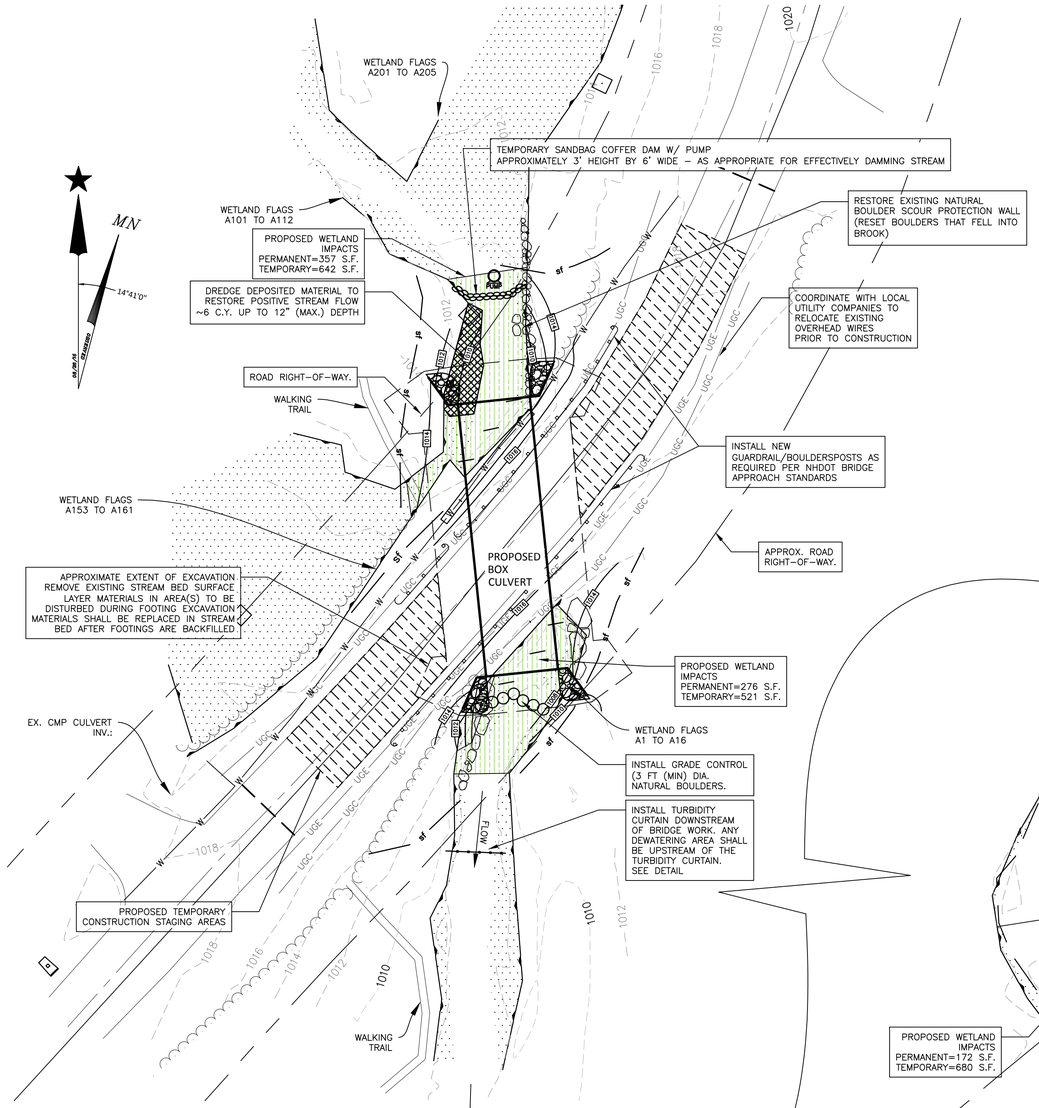

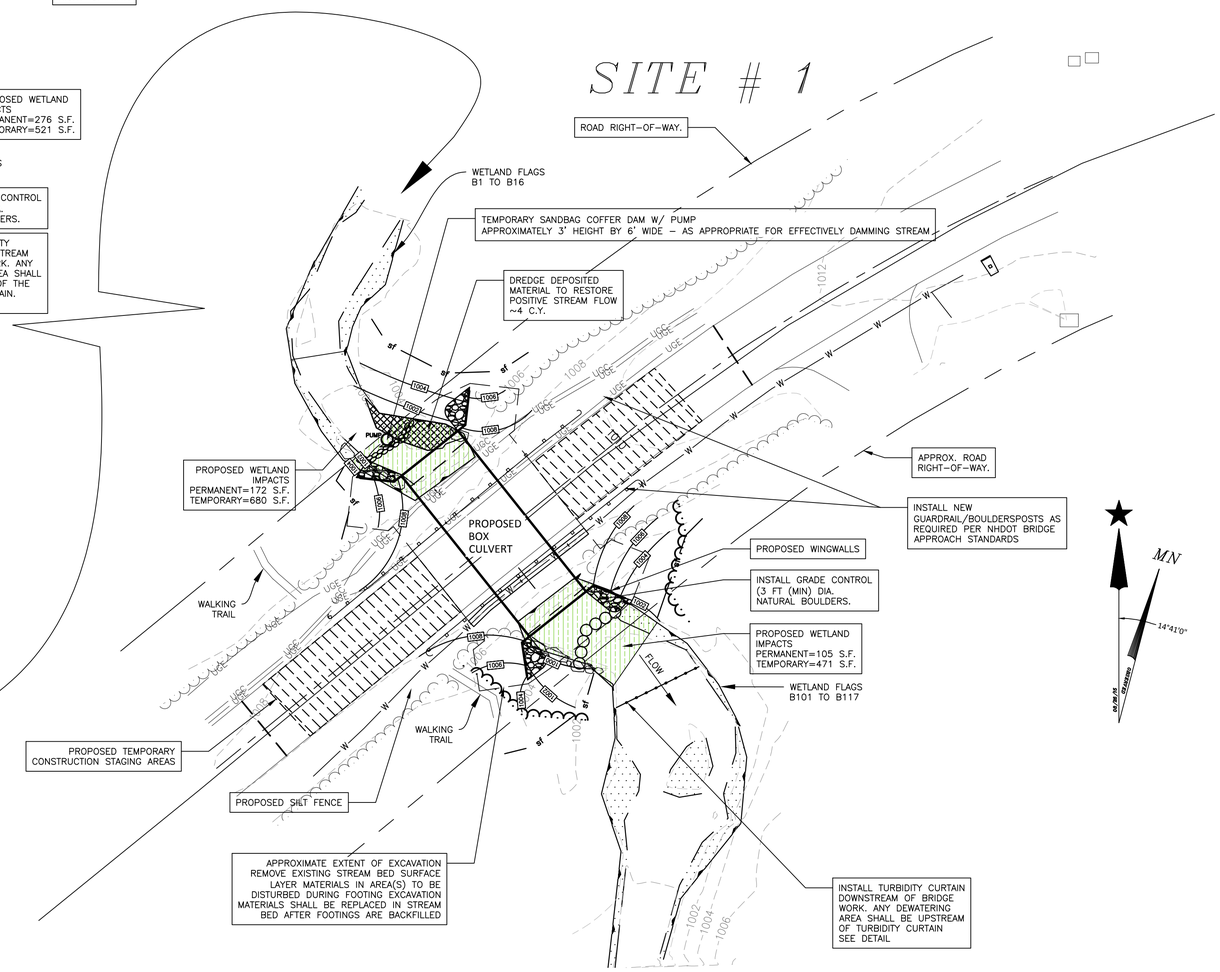

EXISTING CONDITIONS PLAN KEY

- SIGN
- FIRE HYDRANT
- WATER VALVE
- ELECT./COMM. STRUCTURE
- PIPE DESTINATION UNKNOWN
- BENCHMARK REFERENCE
- SURVEY REFERENCE STATION
- EDGE OF TREELINE
- EDGE OF PAVEMENT
- CONTOURS – 1' INTERVAL
- WATER LINE
- CULVERT
- UNDERGROUND COMM
- UNDERGROUND ELECTRIC
- DELINEATED WETLANDS
- STONE BOUND FOUND
- WETLAND IMPACTS
- NHDOT TYPE B RIPRAP

DIG SAFE
ME NH VT
CALL 1-888-DIG-SAFE TOLL FREE
811 (1-1-1) UNDERGROUND PLANT DAMAGE PREVENTION SYSTEM

CONTACT DIG SAFE 72 HOURS PRIOR TO CONSTRUCTION

THE LOCATION OF ANY UTILITY INFORMATION SHOWN ON THIS PLAN IS APPROXIMATE. CLD ENG. INC. MAKES NO CLAIM TO THE ACCURACY OR COMPLETENESS OF UTILITIES SHOWN. 72 HOURS PRIOR TO ANY EXCAVATION ON SITE, THE CONTRACTOR SHALL CONTACT DIG-SAFE AT 1-888-DIG-SAFE.

GRAPHIC SCALE

20 0 10 20 40 80

(IN FEET)
1 inch = 20 feet.

NO.	DATE	REVISION
2	9/30/16	MOD. EASEMENTS & FINAL PERMIT PLANS
1	4/20/16	ISSUED FOR PRELIMINARY BID OF SITE 1

DRAWN: CTN | DESIGNED: DLM | CHECKED: CIH | APPROVED: BAV

CONSULTING ENGINEERS
28 Gates Street • Suite 100
White River Jct., VT 05001
(802) 674-1070 • Fax: 674-9949
cld@cldengineers.com • www.cldengineers.com
Maine • New Hampshire • Vermont

CLIENT:
TOWN OF NEW LONDON
PUBLIC WORKS DEPARTMENT
184 SOUTH PLEASANT STREET
NEW LONDON, NH 03257

BROOKSIDE CULVERT REPLACEMENT PROJECT
NEW LONDON
NEW HAMPSHIRE
WETLAND IMPACT PLAN

SCALE:	PROJECT NO.
AS SHOWN	15-0184
DATE: JAN., 2016	DWG. NO. WET

15-0184 BROOKSIDE CULVERTS WETLAND SET.DWG

GENERAL NOTES:

1. THE PURPOSE OF THIS PROJECT IS TO REMOVE AND REPLACE STRUCTURALLY DEFICIENT CULVERTS LOCATED IN TWO LOCATIONS ALONG BROOKSIDE DRIVE ON LYON BROOK. WORK SHALL INCLUDE TEMPORARY COFFER DAM(S) AND BYPASS PUMPING OF LYON BROOK AS WELL AS ROAD RECONSTRUCTION ON THE PROPOSED CROSSINGS APPROACHES.
2. THE "OWNER" OF RECORD FOR THIS PROJECT IS THE TOWN OF NEW LONDON, NEW HAMPSHIRE, 184 SOUTH PLEASANT STREET NEW LONDON, NH 03257.
3. THE "OWNER'S REPRESENTATIVE" IS DEFINED AS THE ENTITY WHO HAS BEEN AUTHORIZED BY THE OWNER TO MAKE ENGINEERING DECISIONS FOR THE PROJECT.
4. TOPOGRAPHY AND PLANIMETRIC DATA SHOWN ON THESE PLANS ARE BASED ON FIELD SURVEY AND DATA COLLECTED BY CLD CONSULTING ENGINEERS DURING 2015. HORIZONTAL AND VERTICAL DATUMS ARE BASED ON GPS COORDINATES CALCULATED AND ADJUSTED TO STATE PLANE.
5. THE ELEVATIONS, DIMENSIONS, AND LOCATION OF ALL PROPOSED COMPONENTS SHALL BE FIELD VERIFIED BY CONTRACTOR.
6. SITE ENGINEERING PERFORMED BY CLD CONSULTING ENGINEERS. CONTACT PERSON IS BRIAN VINCENT AT 802-698-0370.
7. THE OWNER'S REPRESENTATIVE MAY MODIFY THE PROPOSED GRADING IF EXISTING FIELD CONDITIONS HAVE SIGNIFICANTLY CHANGED OR UNEXPECTED CONDITIONS ARISE (I.E. BEDROCK, LEDGE, OTHER OBSTRUCTIONS, ETC.). PROPOSED CULVERT SLOPES MAY NOT BE MODIFIED IN THE FIELD WITHOUT APPROVAL FROM THE ENGINEER.
8. WRITTEN DIMENSIONS HAVE PRECEDENCE OVER SCALED DIMENSIONS. THE CONTRACTOR SHALL USE CAUTION WHEN SCALING REPRODUCED PLANS. IN CASE OF CONFLICT BETWEEN THIS PLAN SET AND ANY OTHER DRAWING OR SPECIFICATION, THE OWNER'S REPRESENTATIVE SHALL BE NOTIFIED IMMEDIATELY FOR CLARIFICATIONS.
9. THE CONTRACTOR SHALL BE FAMILIAR WITH THE EXISTING CONDITIONS OF THE SITE AND SURROUNDINGS PRIOR TO BIDDING ON OR PERFORMING THE WORK.
10. THE CONTRACTOR SHALL BID AND PERFORM THE WORK FROM A COMPLETE SET OF PLANS AND SPECIFICATIONS, AND SHALL NOTIFY THE OWNER'S REPRESENTATIVE OF ANY CONFLICTS WITHIN THE CONSTRUCTION DOCUMENTS.
11. THE CONTRACTOR SHALL BID AND PERFORM THE WORK IN ACCORDANCE WITH ALL LOCAL, STATE, AND NATIONAL CODES, SPECIFICATIONS, REGULATIONS, STANDARDS, AND DETAILS.
12. NO DEVIATION OR DEPARTURE FROM THE DESIGN INTENT PRESENTED IN THE CONTRACT DOCUMENTS (PLANS AND SPECIFICATIONS) WILL BE ALLOWED UNLESS AUTHORIZED BY THE OWNER'S REPRESENTATIVE.
13. THE CONTRACTOR SHALL IMMEDIATELY NOTIFY THE OWNER'S REPRESENTATIVE OF ANY CONDITIONS THAT ARE UNEXPECTED, UNKNOWN, AND/OR NOT INDICATED ON THE DRAWINGS AND SHALL PROCEED AS DIRECTED BY THE OWNER'S REPRESENTATIVE.
14. THE CONTRACTOR MUST RECEIVE PRIOR WRITTEN AUTHORIZATION FROM THE OWNER'S REPRESENTATIVE FOR ANY PROPOSED SUBSTITUTIONS FOR ITEMS AND MATERIALS SPECIFIED ON THESE DRAWINGS.
15. THE CONTRACTOR IS RESPONSIBLE FOR THE MEANS AND METHODS OF CONSTRUCTION AND FOR CONDITIONS AT THE SITE. THESE PLANS, PREPARED BY CLD CONSULTING ENGINEERS DO NOT EXTEND TO OR INCLUDE SYSTEMS PERTAINING TO THE SAFETY OF THE CONSTRUCTION CONTRACTOR OR THEIR EMPLOYEES, AGENTS OR REPRESENTATIVES IN THE PERFORMANCE OF THE WORK. THE SEAL OF THE SURVEYOR OR ENGINEER HERE ON DOES NOT EXTEND TO ANY SUCH SAFETY SYSTEMS THAT MAY NOW OR HEREAFTER BE INCORPORATED INTO THESE PLANS. THE CONSTRUCTION CONTRACTOR SHALL PREPARE OR OBTAIN THE APPROPRIATE SAFETY SYSTEMS WHICH MAY BE REQUIRED BY THE U.S. OCCUPATIONAL SAFETY AND HEALTH ADMINISTRATION (OSHA), LOCAL REGULATIONS, AND/OR THE BOARD OF LABOR.
16. TOXIC OR HAZARDOUS WASTE IS NOT TO BE STORED OR DISCHARGED ON OR FROM THIS SITE. ALL EQUIPMENT IS TO BE REMOVED FROM NHDES WETLAND JURISDICTIONAL AREAS DAILY AND IMMEDIATELY AFTER OPERATIONS ARE CEASED.

MEETINGS, SUBMITTAL, AND REQUIRED INSPECTIONS:

1. THE CONTRACTOR MUST PARTICIPATE IN AN ON-SITE PRE-CONSTRUCTION CONFERENCE.
2. CONTRACTOR SHALL SUBMIT CONTROL OF WATER METHOD TO THE OWNER OR OWNER'S REPRESENTATIVE FOR APPROVAL 14 DAYS PRIOR TO START OF WORK.

PERMITS:

1. THE FOLLOWING PERMITS ARE BEING SECURED BY THE OWNER FOR THIS PROJECT:

   NHDES DREDGE & FILL
   US ARMY CORPS OF ENGINEERS PROGRAMMATIC GENERAL PERMIT
2. THE CONTRACTOR IS RESPONSIBLE FOR FAMILIARIZING HIMSELF WITH THE REQUIREMENTS OF THESE PERMITS AND APPROVALS PRIOR TO BIDDING, AND FOR COMPLYING WITH THEM DURING CONSTRUCTION.

CONSTRUCTION NOTES:

1. SITE CONDITIONS MAY DIFFER FROM THOSE SHOWN ON THE DRAWINGS DUE TO UNFORESEEN CIRCUMSTANCES SINCE THE TIME OF SURVEY.
2. ALL STANDING EXISTING TREES TO REMAIN UNLESS OTHERWISE IDENTIFIED ON THE DRAWINGS OR DIRECTED BY THE OWNER'S REPRESENTATIVE.
3. CONTRACTOR MUST LAY OUT AND STAKE OUT LIMITS CONSTRUCTION FENCE PRIOR TO CONSTRUCTION.
4. NO STREAM BOTTOM DISTURBANCE, INCLUDING MOVEMENT OF EQUIPMENT, WILL BE ALLOWED MORE THAN 3' BEYOND LIMITS OF WORK SHOWN ON PLANS. WORKING OUTSIDE OF THESE LIMITS MAY TRIGGER ADDITIONAL PERMITTING REQUIREMENTS, WHICH WILL BE THE CONTRACTOR'S RESPONSIBILITY.
5. LOCATE STAGING AREAS AWAY FROM SENSITIVE AREAS INCLUDING WETLANDS.
6. WHEN DEWATERING PUMPING IS UTILIZED: THE CONTRACTOR WILL CREATE AND UTILIZE A DEWATERING AREA; SIZE WILL BE ADJUSTED AS NECESSARY BY CONTRACTOR, AT NO ADDITIONAL CHARGE TO OWNER, TO ACCOMMODATE MAXIMUM DISCHARGE FLOWS. ALTERNATIVE DEWATERING DISCHARGE METHODS IE. FILTER BAGS, ETC. MAY BE PROPOSED TO ENGINEER FOR APPROVAL PRIOR TO COMMENCEMENT OF CONSTRUCTION. ANY AND ALL METHODS UTILIZED SHALL BE DISMANTLED/REMOVED FROM THE SITE ONCE NO LONGER UTILIZED.
7. ALL EXCESS EXCAVATED MATERIAL WILL BE REMOVED FROM SITE TO PRE-APPROVED LOCATIONS AND SHALL BE PLACED/DISPOSED OF IN ACCORDANCE WITH ALL CURRENT FEDERAL, STATE AND LOCAL REGULATIONS AT NO ADDITIONAL COST TO OWNER.
8. EXCAVATION MATERIAL SHALL BE REMOVED FROM IMMEDIATE SITE AND PLACED IN A STOCKPILE/ STAGING AREA UPLAND AND PROTECTED BY EROSION CONTROL FEATURES. COVER ALL STOCKPILES IF NOT WORKED WITHIN 72 HOURS OR STABILIZE WITH SEED AND MULCH.

BOUNDARY NOTES:

1. PER NHDES REGULATIONS, THE "OWNER" SHALL SECURE PERMISSION FROM ABUTTING OWNER(S) FOR ANY TEMPORARY WORK THAT MAY TAKE PLACE ON OR WITHIN 20 FEET OF THAT PARCEL. ACQUISITION OF ALL EASEMENTS, RIGHTS OF WAY, AND/OR RELATED PERMISSION FROM LANDOWNERS AND ABUTTERS IS THE RESPONSIBILITY OF THE OWNER. CLD CONSULTING ENGINEERS HAS ASSUMED THAT ALL REQUIRED ACQUISITIONS HAVE BEEN OR WILL BE OBTAINED BY THE OWNER.
2. ALL CONSTRUCTION ACTIVITIES SHALL BE PERFORMED WITHIN THE IDENTIFIED CONSTRUCTION LIMITS. ANY NEED TO GO BEYOND THESE LIMITS MAY TRIGGER ADDITIONAL PERMITTING REQUIREMENTS AND WILL REQUIRE PRIOR WRITTEN APPROVAL BY OWNER AND OWNER'S REPRESENTATIVE.

UTILITIES NOTES:

1. THE CONTRACTOR IS RESPONSIBLE FOR VERIFYING AND DETERMINING ALL UTILITIES (ABOVE AND BELOW GROUND) WITHIN THE PROJECT LIMITS, AND TO TAKE THE NECESSARY PRECAUTIONS TO PROTECT UTILITIES DURING CONSTRUCTION.
2. THE CONTRACTOR IS RESPONSIBLE FOR CONTACTING DIGSAFE AT 1-888-DIG-SAFE AT LEAST 72 HOURS BEFORE DIGGING. ALL UTILITY SERVICE CONNECTION POINTS SHALL BE CONFIRMED INDEPENDENTLY BY THE CONTRACTOR IN THE FIELD PRIOR TO THE INITIATION OF CONSTRUCTION.
3. THE OWNER SHALL BE NOTIFIED IN WRITING OF ANY UTILITIES FOUND INTERFERING WITH THE PROPOSED CONSTRUCTION, AND APPROPRIATE REMEDIAL ACTION AS SHALL BE DETERMINED AND AGREED UPON BY THE ENGINEER BEFORE PROCEEDING WITH THE WORK.

RESTORATION OF SURFACES NOTES:

1. AT THE COMPLETION OF WORK, CONTRACTOR MUST RESTORE ANY CONSTRUCTION/SITE ACCESS, STAGING, AND WORK AREAS TO PRE-CONSTRUCTION CONDITIONS. RESTORATION MAY INCLUDE APPLYING TOPSOIL, GRASS SEED, FERTILIZER, AND MULCH TO AFFECTED LAWN AREAS AND PATCHING ROADWAY AREAS OR DRIVEWAYS THAT MAY HAVE BEEN DAMAGED BY CONSTRUCTION ACTIVITIES. PATCHING SHALL BE DONE WITH A MATERIAL MATCHING THAT OF WHAT THE ROADWAY OR DRIVEWAY IS MADE OF. IF CONSTRUCTION IS TO TAKE PLACE DURING WINTER MONTHS, SEE WINTER CONSTRUCTION NOTES.

CONTROL OF WATER NOTES

1. CONTRACTOR SHALL SUBMIT CONTROL OF WATER METHOD PLAN INDICATING HIS/HER METHOD OF DEWATERING AND HIS/HER PROPOSED METHOD OF HANDLING THE WATER FROM THE WORK AREA TO OWNER OR OWNER'S REPRESENTATIVE FOR APPROVAL 14 DAYS PRIOR TO START OF WORK.
2. COFFERDAMS AND PUMPING MAY BE UTILIZED TO CONTROL THE FLOW OF WATER AND DEWATERING OF THE WORK AREA. A SANDBAG DAM, CONCRETE BARRIER, STONE, OR COFFERDAM OR SIMILAR METHOD WILL PROVIDE ADEQUATE PROTECTION AGAINST WATER FLOW THROUGH THE WORK AREA.

CONSTRUCTION SEQUENCE:

THE PROPOSED CONSTRUCTION SEQUENCING IS SUMMARIZED BELOW, AS FOLLOWS: NOTE THAT ONLY ONE CULVERT CROSSING WILL BE CONTRUCTED AT A TIME SUCH THAT RESIDENTAL PROPERTY ACCESS IS MAINTAINED DURING CONSTRUCTION

1. CLOSE BROOKSIDE DRIVE TO THROUGH TRAFFIC AT ONE OF THE CULVERT CROSSINGS.
2. INSTALL EROSION CONTROL MEASURES IN STAGING AREAS AND UPGRADIENT WORK ZONES.
3. SET UP CONSTRUCTION STAGING AREA ON EITHER SIDE OF BROOKSIDE DRIVE, IMMEDIATELY ADJACENT TO THE CROSSING.
4. MOBILIZE UTILITY COMPANIES TO LOCATE EXISTING UTILITIESINCLUDING WATER, POWER, CABLE AND TELEPHONE. SUPPLY TEMPORARY POLES AND SERVICES AS NEEDED.
5. MOBILIZE EQUIPMENT AND CULVERT TO THE SITE. BEGIN CULVERT ASSEMBLY.
6. INSTALL SANDBAG COFFER DAM APPROXIMATELY 30 FEET UPSTREAM OF THE CROSSING, BLOCKING STREAM FLOW AND INSTALLING TEMPORARY PUMP BYPASS. WORK WOULD OCCUR DURING LOW-FLOW PERIODS. PUMP BYPASS WOULD INCLUDE LARGE PUMPS WITH PUMP BACKUP ON-SITE. EMERGENCY OVERFLOW PROVISIONS WOULD BE INCLUDED IN THE SANDBAG COFFER DAM. NO EQUIPMENT OR SUPPLIES WILL BE LEFT IN THE STREAM CHANNEL DOWNSTREAM OF THE COFFER DAM DURING NON-WORK HOURS OR CONSTRUCTION DOWNTIMES.
7. REMOVE THE EXISTING ASPHALT AND COVER. SALVAGE FOR REUSE AS DIRECTED BY ENGINEER.
8. HAND EXCAVATE TO LOCATE SHALLOW UTILITIES
9. EXCAVATE CAREFULLY TO LOCATE EXISTING WATER LINE AND ELECTRIC/TELEPHONE AND CABLE CONDUIT(S).
10. SUPPORT UTILITIES AS REQUIRED.
11. CLEARING, GRUBBING AND TREE REMOVAL FOR DISTURBED AREAS.
12. REMOVE EXISTING CULVERTS AND HAUL OFF SITE FOR LEGAL DISPOSAL.
13. DREDGE EXISTING DEPOSITED MATERIAL LOCATED ON INLET ENDS OF EXISTING CULVERTS AT AREAS AND QUANTITIES AS INDICATED ON THE PLAN. AS REQUIRED TO RESTORE POSITIVE STREAM FLOW.
14. EXCAVATE AND PREPARE SUBGRADE FOR NEW CULVERTS. REFER TO NOTE 7 UNDER GENERAL NOTES.
15. INSTALL NEW CULVERTS AND WINGWALLS
16. BACKFILL CULVERTS AND WINGWALLS WITH CLEAN STRUCTURAL FILL. BACKFILL TO BE PLACED AND COMPACTED IN LIFTS. THE STRUCTURE SHALL BE BACKFILLED USING CLEAN WELL GRADED GRANULAR MATERIAL THAT MEETS THE REQUIREMENTS OF AASHTO M 145 FOR SOIL CLASSIFICATIONS A-1, A-3, A-2-4, A-2-5. BACKFILL MUST BE PLACED SYMMETRICALLY ON EACH SIDE OF THE STRUCTURE IN 6 TO 8 INCH LIFTS. EACH LIFT SHALL BE COMPACTED TO A MINIMUM OF 95 PERCENT MODIFIED PROCTOR DENSITY.
17. INSTALL 2.5 FOOT-WIDE EMBANKMENTS ALONG EACH EDGE OF THE ABUTMENTS, AND STABILIZE WITH STONE, SEED AND MULCH, AS NEEDED PER CONSTRUCTION PLANS.
18. RESTORE ANY IMPACTED AREAS OF STREAMBED WITH SIMULATED CHANNEL BOTTOM. MAINTAIN EXISTING CHANNEL SLOPE.
19. INSTALL GRADE CONTROL BOULDER WEIR AS SHOWN ON PLAN AND SHEET D4.
20. INSTALL AND STABILIZE SCOUR COUNTERMEASURE STONE (RIPRAP) ALONG EACH ABUTMENT.
21. REMOVE SANDBAG COFFER DAM AND PUMPS.
22. RECONSTRUCT BRIDGE APPROACHES NORTH AND SOUTH OF THE NEW ALUMINUM BOX CULVERT.
23. INSTALL GUARDRAIL AND PAVEMENT SECTIONS.
24. CLEAR STAGING AREAS IN PREPARATION FOR DEMOBILIZATION.
25. STABILIZE CONSTRUCTION STAGING AREA AND WORK ZONES.
26. UPON SITE STABILIZATION, REMOVE EROSION CONTROL MEASURES AS NEEDED.
27. DEMOBILIZE FROM SITE.

BEST MANAGEMENT FOR FUELING AND MAINTENANCE OF EXCAVATION AND EARTHMOVING EQUIPMENT - MOBILE FUELING

1. MOBILE FUELING - THIS INVOLVES FUELING EARTHMOVING OR EXCAVATION EQUIPMENT FROM A TANK TRUCK OR SOME OTHER CONTAINER THAT IS MOVED AROUND THE SITE. SECONDARY CONTAINMENT EQUIPMENT USED DURING MOBILE FUELING SHOULD BE SIZED TO CONTAIN THE MOST LIKELY VOLUME OF FUEL TO BE SPILLED DURING A FUEL TRANSFER.
2. PROVIDE SECONDARY CONTAINMENT AROUND FUEL STORAGE CONTAINERS AND DURING TRANSFERS. SECONDARY CONTAINMENT MUST BE PROVIDED FOR ALL REGULATED CONTAINERS AND BE IN PLACE DURING REFUELING ACTIVITIES INVOLVING TRANSFERS OF FUEL FROM "ONROAD" DELIVERY TRUCKS, "OFFROAD" TANK TRUCKS (REFERRED TO AS "MOBILE REFUELERS") OR PORTABLE CONTAINERS TO FIELD EQUIPMENT. CONTAINMENT EQUIPMENT SHOULD BE POSITIONED TO CATCH ANY FUEL SPILLS DUE TO OVERFILLING THE EQUIPMENT AND ANY OTHER SPILLS THAT MAY OCCUR AT OR NEAR THE FUEL FILLER PORT TO THAT EQUIPMENT. THE SELECTION OF CONTAINMENT EQUIPMENT AND ITS POSITIONING AND USE SHOULD TAKE INTO ACCOUNT ALL OF THE DRIP POINTS ASSOCIATED WITH THE FUEL FILLING PORT AND THE HOSE FROM THE FUEL DELIVERY.
3. PERSONNEL MUST ATTEND TO THE FUELING PROCESS TO ENSURE THAT ANY SPILLS WILL BE OF LIMITED VOLUME.
4. TRAIN EMPLOYEES TO PREVENT, CONTAIN, AND CLEAN UP SPILLS. TRAIN EMPLOYEES IN ALL ASPECTS OF PROPER STORAGE AND HANDLING OF FUEL OR OTHER REGULATED SUBSTANCES. INSTRUCT EMPLOYEES TO USE SPILL PREVENTION EQUIPMENT (E.G., DRIP PANS, ETC.), BE PRESENT DURING ALL FUEL TRANSFERS, AND IMMEDIATELY CLEAN UP SPILLS AND CONTAMINATED SOIL. ABSORBENTS TO PICK UP SPILLS AND LEAKS MUST BE LOCATED IN THE IMMEDIATE AREA WHERE FUELS ARE TRANSFERRED, USED, OR STORED. IN ADDITION, SPILL RESPONSE INFORMATION MUST BE POSTED AT ALL STORAGE AREAS (POSTER AVAILABLE FROM DES).
5. IMMEDIATELY REPORT SIGNIFICANT OR UNCONTROLLED SPILLS. SMALL SPILLS THAT ARE QUICKLY CLEANED UP DO NOT NEED TO BE REPORTED. HOWEVER, IF ANY OF THE FOLLOWING OCCURS, THE SPILL MUST BE IMMEDIATELY REPORTED TO THE N.H. DEPARTMENT OF ENVIRONMENTAL SERVICES AT (603) 271-3899 OR (603) 271-3636 AFTER 4 P.M. ON WEEKDAYS OR ON WEEKENDS:
   - THE SPILL IS 25 GALLONS OR MORE.
   - THE SPILL IS NOT CONTAINED IMMEDIATELY.
   - THE SPILL AND CONTAMINATION ARE NOT COMPLETELY REMOVED WITHIN 24 HOURS.
   - THERE IS IMPACT OR POTENTIAL IMPACT TO GROUNDWATER OR SURFACE WATER.
6. KEEP CONTAINERS AWAY FROM SURFACE WATERS, CATCH BASINS (STORMWATER), PRIVATE AND PUBLIC WATER SUPPLY WELLS. CONTAINERS MUST BE KEPT AT LEAST 75 FEET FROM CATCH BASINS AND SURFACE WATERS, 75 FEET FROM PRIVATE WELLS, AND OUTSIDE THE SANITARY RADIUS (VARIES FROM 150 TO 400 FEET) OF A PUBLIC WELL CONTACT THE LOCAL PUBLIC WATER SUPPLIER OR DES (271-0688) TO DETERMINE THE SANITARY RADIUS FOR THE WELL.
7. REFER TO NEW HAMPSHIRE DEPARTMENT OF ENVIRONMENTAL SERVICES FACT SHEET WDDWGB226 BEST MANAGEMENT PRACTICES FOR FUELING AND MAINTENANCE OF EXCAVATION AND EARTHMOVING EQUIPMENT, 2010 RELATING TO ENV-WQ 401 RULES FOR ADDITIONAL INFORMATION OR CONTACT NHDES DIRECTLY AT (603) 271-2947

POLLUTION CONTROL

1. WASH EQUIPMENT PRIOR TO BRINGING TO THE WORK AREA TO REMOVE LEAKED PETROLEUM PRODUCTS AND AVOID INTRODUCTION OF INVASIVE PLANTS.
2. WHEN POSSIBLE REPLACE HYDRAULIC OILS WITH VEGETABLE BASED OILS IN CASE A LINE IS BROKEN NEAR THE STREAM.
3. TO AVOID LEAKS, REPAIR EQUIPMENT PRIOR TO CONSTRUCTION.
4. BE PREPARED TO USE PETROLEUM ABSORBING "DIAPERS" IF NECESSARY.
5. LOCATE REFUELING AREAS AND HAZARDOUS MATERIAL CONTAINMENT AREAS AWAY FROM STREAMS AND OTHER SENSITIVE AREAS.
6. ESTABLISH APPROPRIATE AREAS FOR WASHING CONCRETE MIXERS; PREVENT CONCRETE WASH WATER FROM ENTERING RIVERS AND STREAMS.
7. TAKE STEPS TO PREVENT LEAKAGE OF STOCKPILED MATERIALS INTO STREAMS OR OTHER SENSITIVE AREAS. LOCATE AWAY FROM WATER BODIES AND OTHER SENSITIVE AREAS, PROVIDE SEDIMENT BARRIERS AND TRAPS, AND COVER STOCKPILES DURING HEAVY RAINS.

EROSION CONTROL NOTES:

1. PERIMETER EROSION CONTROLS (STRAW WATTLES/SILT FENCE, DEMARCATION FENCE, ETC.) SHALL BE INSTALLED PRIOR TO EARTH MOVING OPERATIONS.
2. ALL EROSION AND SEDIMENT CONTROL PRACTICES AND MEASURES TO BE CONSTRUCTED, APPLIED AND MAINTAINED IN ACCORDANCE WITH THESE DRAWINGS, PER THESE NOTES AND DETAILS, ACCORDING TO MANUFACTURER'S RECOMMENDATIONS, AND IN ACCORDANCE WITH NH STORMWATER MANAGEMENT MANUAL, VOLUME 3: CONSTRUCTION PHASE EROSION AND SEDIMENT CONTROL (DECEMBER 2008).
3. THE CONTRACTOR SHALL USE PROPER EROSION AND SEDIMENT CONTROL MEASURES AS NECESSARY TO ENSURE NO SEDIMENT IS TRACKED OFF-SITE (E.G. NHDOT STABILIZED CONSTRUCTION ENTRANCE).
4. EROSION CONTROL BLANKET SHALL BE NORTH AMERICAN GREEN (NAG) S75BN (OR AN EQUIVALENT APPROVED BY THE OWNER'S DESIGNATED REPRESENTATIVE). EROSION CONTROL BLANKETS AND ANCHORED MULCH NETTING SHALL BE 100% BIODEGRADABLE (PLASTIC NETTING WILL NOT BE ALLOWED) AND SHALL BE INSTALLED IN ACCORDANCE WITH THE MANUFACTURERS INSTRUCTIONS. CONTRACTOR IS RESPONSIBLE FOR ENSURING THAT THE EROSION CONTROL BLANKET IS ADEQUATELY SECURED TO FINAL GRADE SURFACE. IF CONSTRUCTION IS TO TAKE PLACE DURING WINTER MONTHS, SEE WINTER CONSTRUCTION NOTES ON THIS SHEET.
5. ALL STOCKPILES, BORROW AREAS, AND SPOILS SHALL BE PROTECTED FROM EROSION AND SURROUNDED BY SILT FENCE/STRAW WATTLES AND STABILIZED.
6. REPAIR OR REPLACEMENT OF EROSION CONTROL MEASURES SHALL BE MADE PROMPTLY AS NEEDED, AND AS DESCRIBED IN THE INSPECTION, MONITORING AND MAINTENANCE NOTES ON THESE DRAWINGS.
7. SILT FENCES SHALL BE KEPT CLEAN DURING CONSTRUCTION AND REMOVED WHEN ALL SLOPES HAVE A HEALTHY STAND OF VEGETATIVE COVER. THE 100% BIODEGRADABLE STRAW WATTLES MAY BE LEFT IN PLACE UPON APPROVAL FROM THE ENGINEER.

EROSION CONTROL INSPECTION MONITORING, AND MAINTENANCE

1. AT LEAST ONCE EVERY 7 CALENDAR DAYS AND DURING OR WITHIN 24 HOURS OF ANY RAIN EVENT IN WHICH 1/2 INCH OF PRECIPITATION OR MORE FALLS WITHIN A 24-HOUR PERIOD. THE CONTRACTOR SHALL HAVE QUALIFIED PERSONNEL INSPECT ALL CLEARED AND GRADED AREAS OF THE CONSTRUCTION SITE AND ALL TEMPORARY AND PERMANENT EROSION CONTROL MEASURES.
2. THIS INSPECTION WILL VERIFY THAT ALL EROSION CONTROL DEVICES ARE IN GOOD AND WORKING CONDITION. DISCHARGE LOCATIONS WILL BE INSPECTED TO VERIFY THAT SEDIMENTS ARE NOT ENTERING THE DRAINAGE SYSTEM AND ARE NOT EXITING THE PROJECT SITE. VEHICLE ACCESS LOCATIONS WILL BE INSPECTED FOR EVIDENCE OF SEDIMENT TRACKING INTO THE PUBLIC RIGHT-OF-WAY.
3. ANY OBSERVED ACCUMULATION OF SEDIMENT OFF THE SITE WILL BE IMMEDIATELY REMOVED AND THE AREA RESTORED TO PRE-CONSTRUCTION CONDITIONS.
4. THE CONTRACTOR SHALL MAINTAIN INSPECTION AND REPAIR REPORTS OF EROSION AND SEDIMENT CONTROL MONITORING AND THESE SHALL BE KEPT AT THE PROJECT SITE DURING CONSTRUCTION. THE REPORTS SHALL INCLUDE THE FOLLOWING:
   - THE INSPECTION DATE;
   - NAMES, TITLES, AND QUALIFICATIONS OF PERSONNEL MAKING THE INSPECTION;
   - WEATHER INFORMATION AND A DESCRIPTION OF ANY DISCHARGES OCCURRING AT THE TIME OF THE INSPECTION;
   - LOCATION(S) OF DISCHARGES OF SEDIMENT OR OTHER POLLUTANTS FROM THE SITE;
   - LOCATION(S) OF BMPS THAT NEED TO BE MAINTAINED;
   - LOCATION(S) OF BMPS THAT FAILED TO OPERATE AS DESIGNED OR PROVED INADEQUATE FOR A PARTICULAR LOCATION;
   - LOCATION(S) WHERE ADDITIONAL BMPS ARE NEEDED THAT DID NOT EXIST AT THE TIME OF INSPECTION; AND
   - CORRECTIVE ACTION REQUIRED INCLUDING IMPLEMENTATION DATES
5. TEMPORARY MEASURES
   INSPECTION SHALL VERIFY THAT ANY TEMPORARY MEASURES BEING USED BY THE CONTRACTOR ARE CONSTRUCTED AND OPERATING IN ACCORDANCE WITH APPROVED STANDARDS AND SPECIFICATIONS. MEASURES SHALL BE REPAIRED AND ACCUMULATION OF SEDIMENTS SHALL BE CLEANED AS NEEDED.

WINTER CONSTRUCTION NOTES:

REFERENCE: NEW HAMPSHIRE STORMWATER MANAGEMENT MANUAL: VOLUME 3 - DEC. 2008.

FOR SITE WORK CONSTRUCTION BETWEEN OCTOBER 15TH AND EARLY APRIL THE CONTRACTOR SHALL FOLLOW WINTER CONSTRUCTION EROSION PROTECTION METHODS AS DESCRIBED BELOW:

1. CHECK ALL PERIMETER EROSION CONTROL MEASURES AND COMPLETE ANY REQUIRED MAINTENANCE AND REPAIR BEFORE THE GROUND FREEZES.
2. PUT IN PLACE ANY ADDITIONALLY NECESSARY EROSION CONTROL MEASURES; DIVERSION DIKES, HAY BALES, SILT FENCE, SEDIMENT TRAPS AND/OR BASINS, ETC. TO PROTECT DOWNSTREAM WATER QUALITY FROM ANTICIPATED WINTER WORK PRIOR TO GROUND FREEZING.
3. INSPECT THE EROSION AND SEDIMENT CONTROL MEASURES MORE FREQUENTLY THAN IS SPECIFIED IN THE EROSION CONTROL INSPECTION, MONITORING, AND MAINTENANCE SPECIFICATIONS FOUND ON THIS SHEET DURING THE WINTER AND SPRING THAW MONTHS TO PREVENT FAILURE AND/OR OVERLOADING.
4. BEFORE PREDICTED THAWS AND/OR HEAVY RAIN EVENTS CHECK ALL MEASURES TO ENSURE THAT THEY WILL BE ABLE TO HANDLE POTENTIALLY HEAVY AND INTENSE RUNOFF AND SEDIMENTATION.
5. CONTRACTOR SHALL BE PREPARED TO INSTALL A SECOND LINE OF DEFENSE IF PROBLEMS WITH IN-PLACE EROSION CONTROL MEASURES OCCUR DURING WINTER THAW AND SPRING RAIN EVENTS.

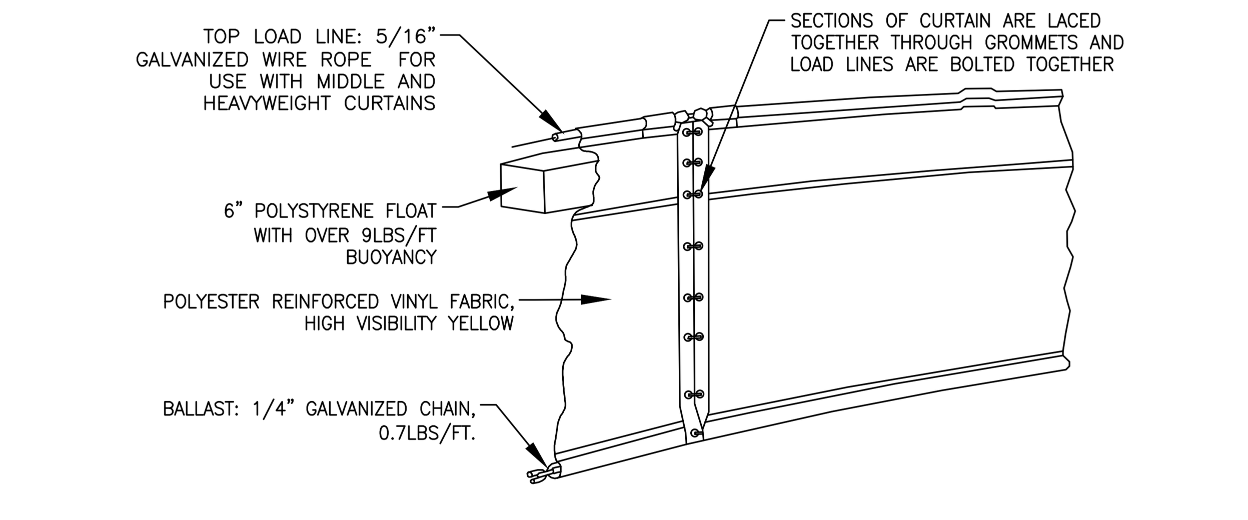

Lightweight Turbidity Curtain

N.T.S.

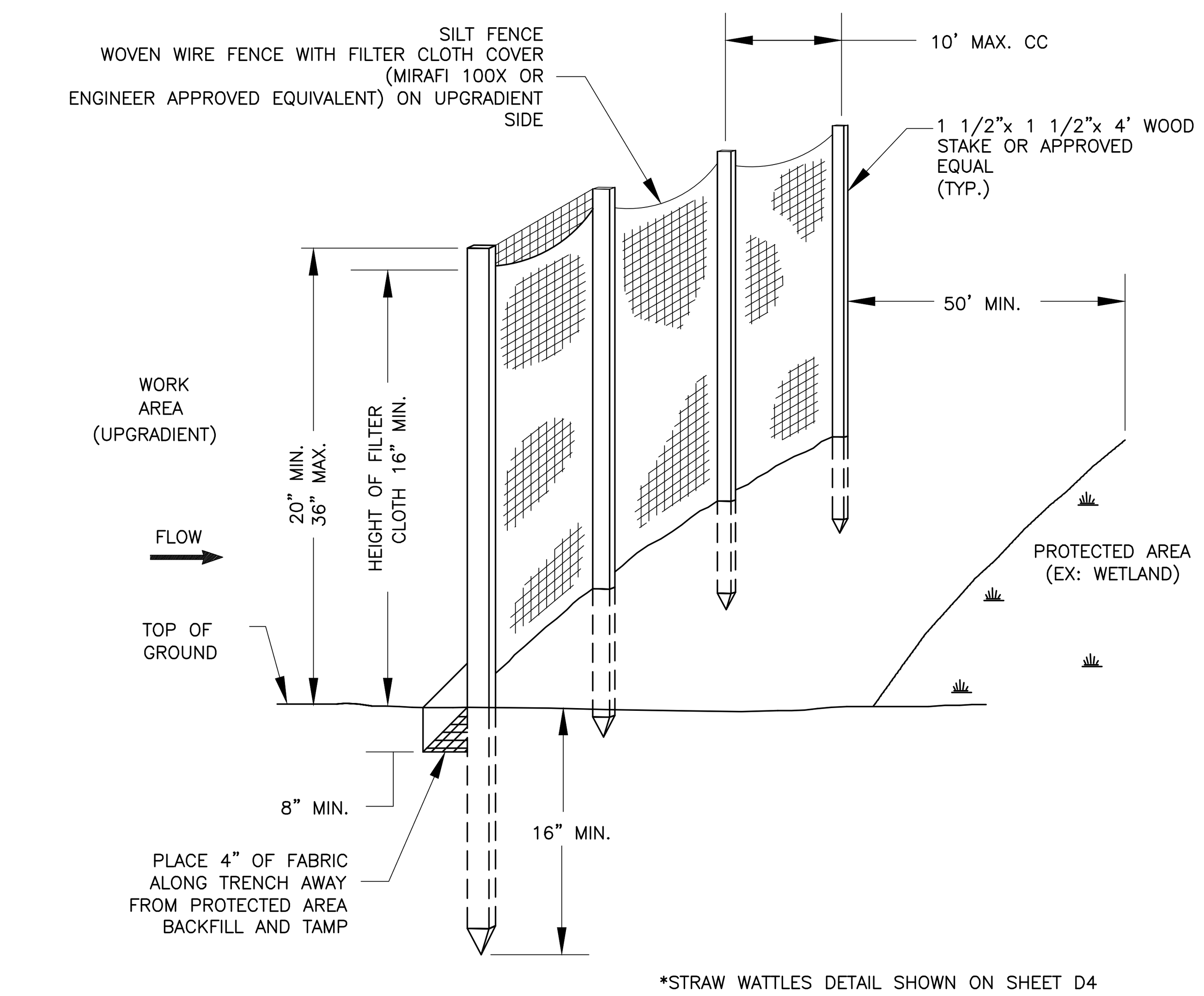

*STRAW WATTLES DETAIL SHOWN ON SHEET D4

Temporary Silt Fence Barrier

N.T.S.

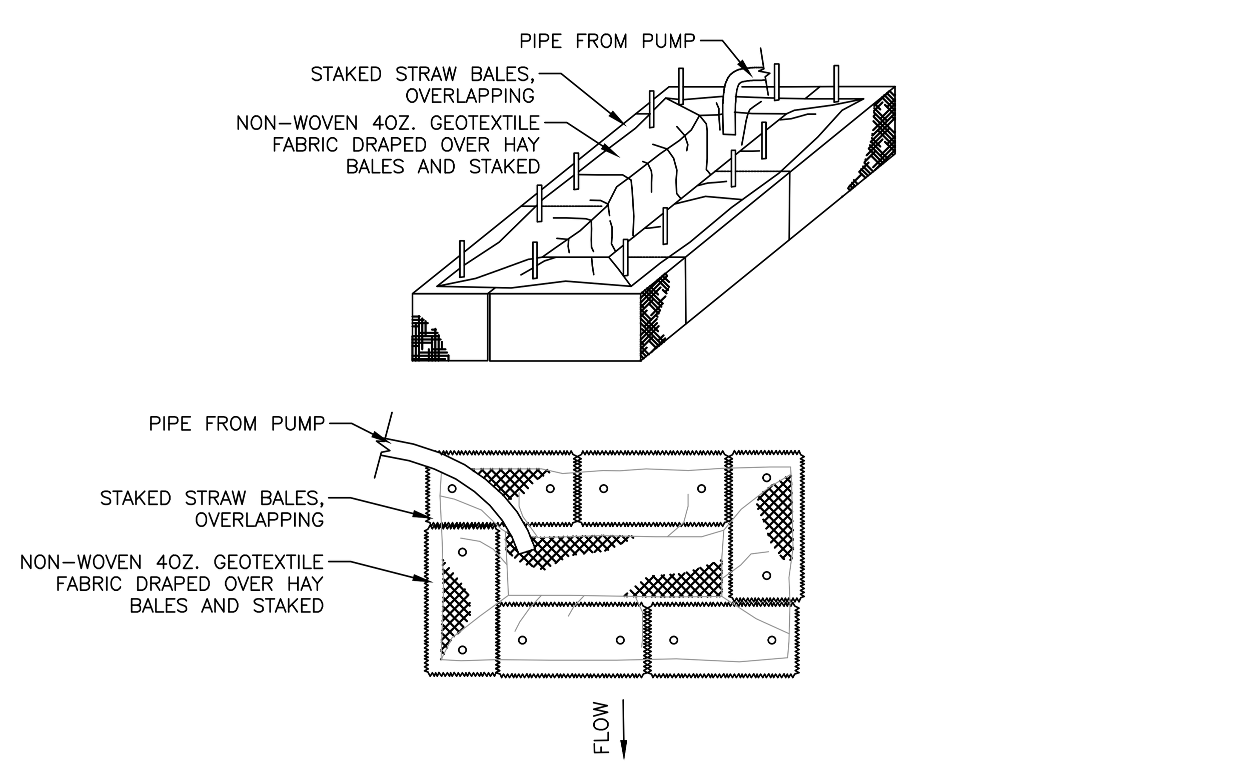

Straw Bale Dewatering Area

N.T.S.

NOTES:
1. *THE DEWATERING AREA SHALL BE PLACED IN A LOCATION WHERE AS NOT TO CREATE EROSION FROM PRODUCED WATER FLOWS.*
2. *AN EROSION CONTROL DEVICE SHALL BE PLACED BETWEEN THE DEWATERING AREA AND BROOK.*
3. *STONE (1 ½"Ø) SHALL BE PLACED UNDER AND AROUND THE STRAW BALE DEWATERING AREA IF FLOWS BEGIN TO ERODE THE EXISTING GROUND SURFACE.*
4. *THE CONTRACTOR MAY REQUEST ALTERNATIVE DEWATERING METHODS SUCH AS FILTER BAGS. ANY ALTERNATIVE MUST BE AUTHORIZED AND ACCEPTED BY THE ENGINEER PRIOR TO USE. FILTER BAG DETAIL IS SHOWN ON D4.*

15-0184 BROOKSIDE CULVERTS WETLAND SET.DWG

NO.	DATE	REVISION
2	9/30/16	MOD. EASEMENTS & FINAL PERMIT PLANS
1	4/20/16	ISSUED FOR PRELIMINARY BID OF SITE 1

DRAWN:	DESIGNED:	CHECKED:	APPROVED:
CTN	DLM	CIH	BAV

CLD CONSULTING ENGINEERS
28 Gates Street • Suite 100
White River Jct. VT 05001
(802) 698-0370 • Fax: (877) 895-4949
cld@cldengineers.com • www.cldengineers.com
Maine • New Hampshire • Vermont

CLIENT:
TOWN OF NEW LONDON
PUBLIC WORKS DEPARTMENT
184 SOUTH PLEASANT STREET
NEW LONDON, NH 03257

BROOKSIDE CULVERT REPLACEMENT PROJECT
NEW LONDON
NEW HAMPSHIRE

PROPOSED CULVERTS
EROSION CONTROL DETAILS

SCALE:	PROJECT NO.
N.T.S.	15-0184
DATE:	DWG. NO.
JAN., 2016	D1

ALUMINUM BOX CULVERT

1.0 GENERAL

1.1 MANUFACTURER SHALL FABRICATE THE ALUMINUM BOX CULVERT AS SHOWN ON THE PLANS. FABRICATION SHALL CONFORM TO THE REQUIREMENTS OF ASTM B–864 AND SHALL CONSIST OF PLATES, RIBS, AND APPURTENANT ITEMS.

PLATE THICKNESS, RIB SPACING, END TREATMENT AND TYPE OF INVERT AND FOUNDATION SHALL BE AS INDICATED ON THE PLANS. ALL MANUFACTURING PROCESSES INCLUDING CORRUGATING, PUNCHING, CURVING AND REQUIRED GALVANIZING SHALL BE PERFORMED BY MANUFACTURER.

1.2 THE CONTRACTOR SHALL VERIFY ALL FIELD DIMENSIONS AND CONDITIONS PRIOR TO ORDERING MATERIALS.

2.0 DIMENSIONS

2.1 THE PROPOSED STRUCTURE SHALL BE AN ALUMINUM BOX CULVERT WITH THE FOLLOWING DIMENSIONS:

SPAN: 19'–1"	RISE: 4'–2"
HAUNCH GAGE: 2"	CROWN GAGE: 2"
HAUNCH RIB TYPE: VI	CROWN RIB TYPE: VI
HAUNCH RIB SPACING: 27"	CROWN RIB SPACING: 9"

2.2 ALL PLAN DIMENSIONS ON THE CONTRACT DRAWINGS ARE MEASURED IN A TRUE HORIZONTAL PLAN UNLESS OTHERWISE NOTED.

3.0 ASSEMBLY AND INSTALLATION

3.1 BOLTS AND NUTS SHALL CONFORM TO THE REQUIREMENTS OF ASTM A–307 OR ASTM A–449. THE BOX CULVERT SHALL BE ASSEMBLED IN ACCORDANCE WITH THE PLATE LAYOUT DRAWINGS PROVIDED BY THE MANUFACTURER AND PER THE MANUFACTURER'S RECOMMENDATIONS.

BOLTS SHALL BE TIGHTENED USING AN APPLIED TORQUE OF BETWEEN 100 AND 150 FT.–LBS.

3.2 THE BOX CULVERT SHALL BE INSTALLED IN ACCORDANCE WITH THE PLANS AND SPECIFICATIONS, THE MANUFACTURER'S RECOMMENDATIONS, AND AASHTO STANDARD SPECIFICATION FOR HIGHWAY BRIDGES – SECTION 26 DIVISION II – CONSTRUCTION. CULVERT ASSEMBLY TO BE PERFORMED BY MANUFACURER/SUPPLIER.

3.3 TRENCH EXCAVATION SHALL BE MADE IN EMBANKMENT MATERIAL THAT IS STRUCTURALLY ADEQUATE. THE TRENCH WIDTH SHALL BE SHOWN ON THE PLANS. POOR QUALITY IN SITU EMBANKMENT MATERIAL MUST BE REMOVED AND REPLACED WITH SUITABLE BACKFILL AS DIRECTED BY THE ENGINEER.

3.4 BEDDING PREPARATION IS CRITICAL TO BOTH STRUCTURE PERFORMANCE AND SERVICE LIFE. THE BED SHOULD BE CONSTRUCTED TO UNIFORM LINE AND GRADE TO AVOID DISTORTIONS THAT MAY CREATE UNDESIRABLE STRESSES IN THE STRUCTURE AND/OR RAPID DETERIORATION OF THE ROADWAY. THE BED SHOULD BE FREE OF ROCK FORMATIONS, PROTRUDING STONES, FROZEN LUMPS, ROOTS, AND OTHER FOREIGN MATTER THAT MAY CAUSE UNEQUAL SETTLEMENT.

3.5 BEDDING SHALL PROVIDE A MINIMUM OF 4,000 PSF BEARING CAPACITY. FOUNDATION DETAILS FOR BEARING CAPACITY LESS THAN 4,000 PSF SHALL BE APPROVED BY THE ENGINEER.

3.6 THE STRUCTURE SHALL BE ASSEMBLED IN ACCORDANCE WITH THE MANUFACTURER'S INSTRUCTIONS. ALL PLATES SHALL BE UNLOADING AND HANDLED WITH REASONABLE CARE. PLATES SHALL NOT BE ROLLED OR DRAGGED OVER GRAVEL ROCK AND SHALL BE PREVENTED FROM STRIKING ROCK OR OTHER HARD OBJECTS DURING PLACEMENT IN TRENCH OR ON BEDDING.

WHEN INSTALLED ON A FULL INVERT , ASSEMBLY OF THE INVERT SHALL START AT THE DOWNSTREAM END. CIRCUMFERENTIAL SEAM LAPS SHALL SHINGLE OVER THE TOP OF THE DOWNSTREAM PLATES AS ASSEMBLY PROGRESSES UPSTREAM. ASSEMBLY OF THE STRUCTURE SHELL SHALL START AT THE UPSTREAM END. DOWNSTREAM RINGS OF PLATES SHALL BE ASSEMBLED OUTSIDE OF THE UPSTREAM RINGS. (CIRCUMFERENTIAL SEAMS ARE SHINGLED DOWNSTREAM WHEN VIEWED FROM THE INSIDE OF THE SHELL).

3.7 THE STRUCTURE SHALL BE BACKFILLED USING CLEAN WELL GRADED GRANULAR MATERIAL THAT MEETS THE REQUIREMENTS FOR BANK–RUN GRAVEL FOR STRUCTURAL FILL PER NHDOT SECTION 508 2.1.2 SEE THE INFORMATION AT THE RIGHT OF THIS SHEET.

BACKFILL MUST BE PLACED SYMMETRICALLY ON EACH SIDE OF THE STRUCTURE IN 6 TO 8 INCH LOOSE LIFTS. EACH LIFT SHALL BE COMPACTED TO A MINIMUM OF 95 PERCENT MODIFIED PROCTOR DENSITY.

3.8 CONSTRUCTION LOADS THAT EXCEED HIGHWAY LOAD LIMITS ARE NOT ALLOWED TO CROSS THE STRUCTURE WITHOUT APPROVAL FROM THE ENGINEER.

NORMAL HIGHWAY TRAFFIC IS NOT ALLOWED TO CROSS THE STRUCTURE UNTIL THE STRUCTURE HAS BEEN BACKFILLED COMPLETELY. IF THE ROAD IS UNPAVED, COVER ALLOWANCE TO ACCOMMODATE RUTTING SHALL BE UTILIZED.

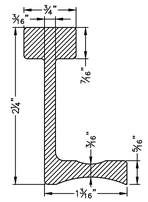

TYPE VI RIB

ALLOY	6061–T6
YIELD STRENGTH	35 KSI [241.3 MPa]
TENSILE STRENGTH	38 KSI [262.0 MPa]
AREA	3.62IN.² [2335 mm²]
CENTER OF MASS Y	Yc = 2.27 IN. [57.6mm]
SECTION MODULUS	4.38 IN³ [71,775mm³]
PLASTIC MODULUS	5.66 IN.³ [92,750mm³]
PLASTIC MOMENT	Mp = 16.52"•" [22.41 KN–M]

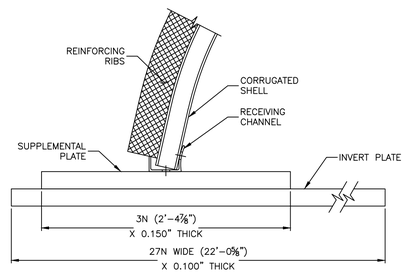

INVERT

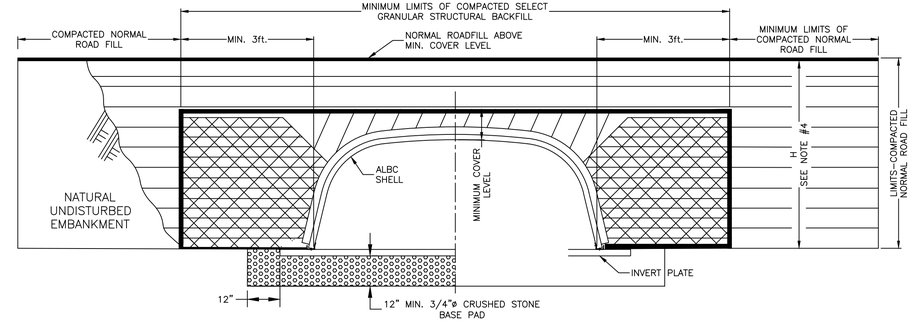

SECTION

CRITICAL BACKFILL ZONE, PRESSURE ON SOIL GREATEST HERE.

INITIAL LIFTS OVER CROWN OF STRUCTURE AS INDICATED BY SHADED AREA TO BE COMPACTED TO REQUIRED DENSITY WITH HAND OPERATED EQUIPMENT.

SELECT GRANULAR STRUCTURAL BACKFILL LIMITS.

NOTES:

1. COMPLETE AND REGULAR MONITORING OF THE ALUMINUM BOX CULVERT SHAPE IS NECESSARY DURING ALL BACKFILLING OF THE STRUCTURE.
2. PREVENT EXCESSIVE DISTORTION OF SHAPE AS NECESSARY BY VARYING COMPACTION METHODS AND EQUIPMENT.
3. TRENCH WIDTH OTHER THAN 3ft. SHALL BE BY DIRECTION OF THE ENGINEER.
4. "H" = STRUCTURE RISE + MAXIMUM ALLOWABLE COVER FOR SHAPE DESIGN SPECIFIED.
5. ANY VOIDS REMAINING UNDER/AROUND ALUMINUM BENT SHEET TOEWALL SHALL BE FILLED WITH FLOWABLE FILL.
6. ENGINEER SHALL INSPECT EXISTING SUBGRADE SURFACE FOR STABILITY PRIOR TO CONSTRUCTION OF THE 3/4" STONE BASE PAD. IF THE SUBGRADE MATERIAL IS UNSUITABLE, OVER EXCAVATION AND REPLACEMENT MAY BE REQUIRED.

STRUCTURAL BACKFILL (NHDOT SECTION 508, 2.1.2)	
SIEVE SIZE	PERCENTAGE BY WEIGHT PASSING
NO. 4 (4.75MM)	25–70
NO. 200 (0.075MM)	15 MAX.
NOT MORE THAN 15% OF THE PORTION WHICH PASSES THE NO. 4 SIEVE SHALL PASS THE NO. 200 SIEVE. NO STONE SHALL BE INCLUDED WHICH CANNOT BE INCORPORATED IN A 6" COURSE.	

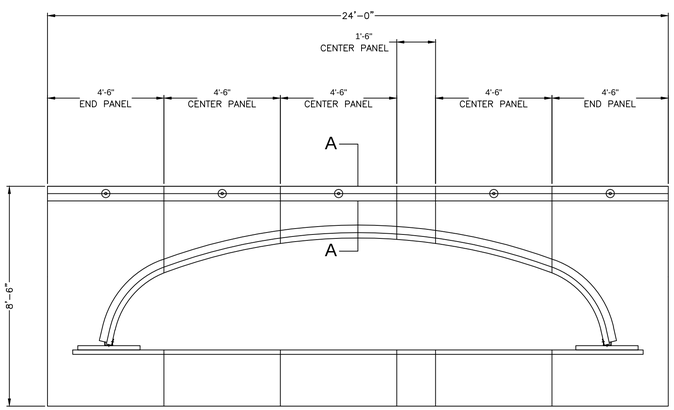

NOTE: DIMENSIONS SHOWN ARE NOMINAL. FINISHED DIMENSIONS ARE SUBJECT TO MANUFACTURING AND INSTALLATION TOLERANCES.

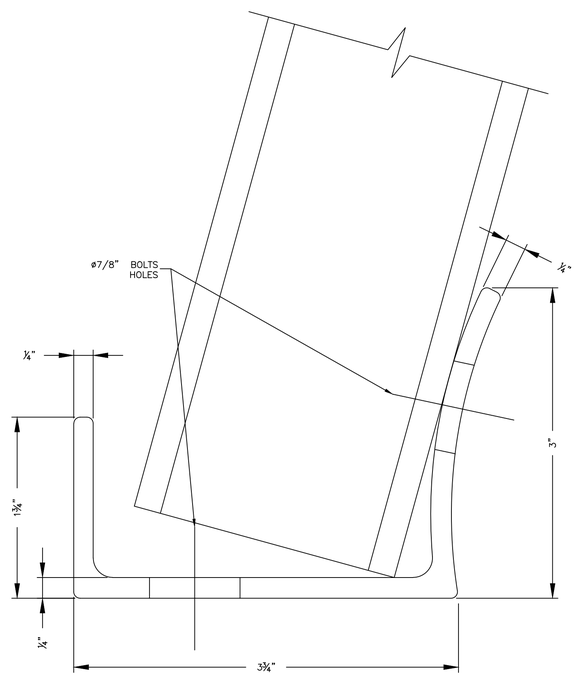

ALUMINUM RECEIVING CHANNEL N.T.S.

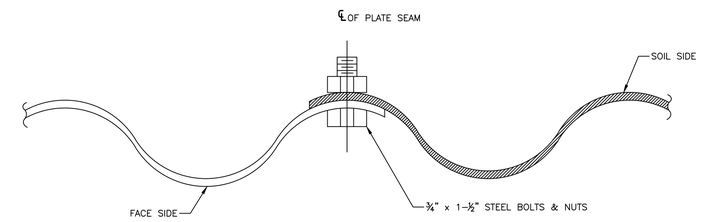

TYPICAL PANEL LAP DETAIL N.T.S.

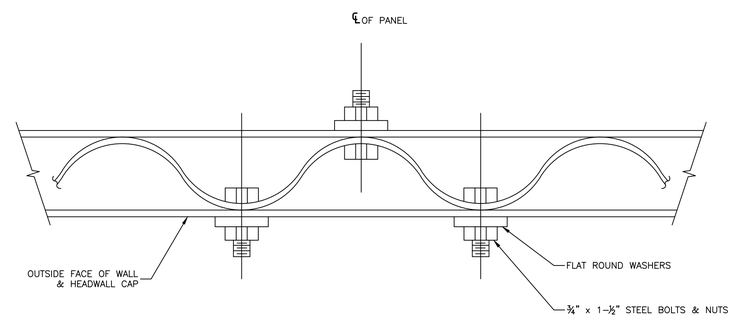

HEADWALL CAP AT ATTACHMENT TO PANEL DETAIL N.T.S.

NO.	DATE	REVISION
2	9/30/16	MOD. EASEMENTS & FINAL PERMIT PLANS
1	4/20/16	ISSUED FOR PRELIMINARY BID OF SITE 1

DRAWN: CTN | DESIGNED: DLM | CHECKED: CIH | APPROVED: BAV

CONSULTING ENGINEERS
28 Gates Street • Suite 100
White River Jct., VT 05001
(802) 884-6700 • Fax: (802) 295-9949
cld@cldengineers.com • www.cldengineers.com
Maine • New Hampshire • Vermont

CLIENT:
TOWN OF NEW LONDON
PUBLIC WORKS DEPARTMENT
184 SOUTH PLEASANT STREET
NEW LONDON, NH 03257

BROOKSIDE CULVERT REPLACEMENT PROJECT
NEW LONDON
NEW HAMPSHIRE
ALUMINUM BOX CULVERT DETAILS

SCALE: N.T.S.	PROJECT NO. 15–0184
DATE: JAN., 2016	DWG. NO. D2

15–0184 BROOKSIDE CULVERTS WETLAND SET.DWG

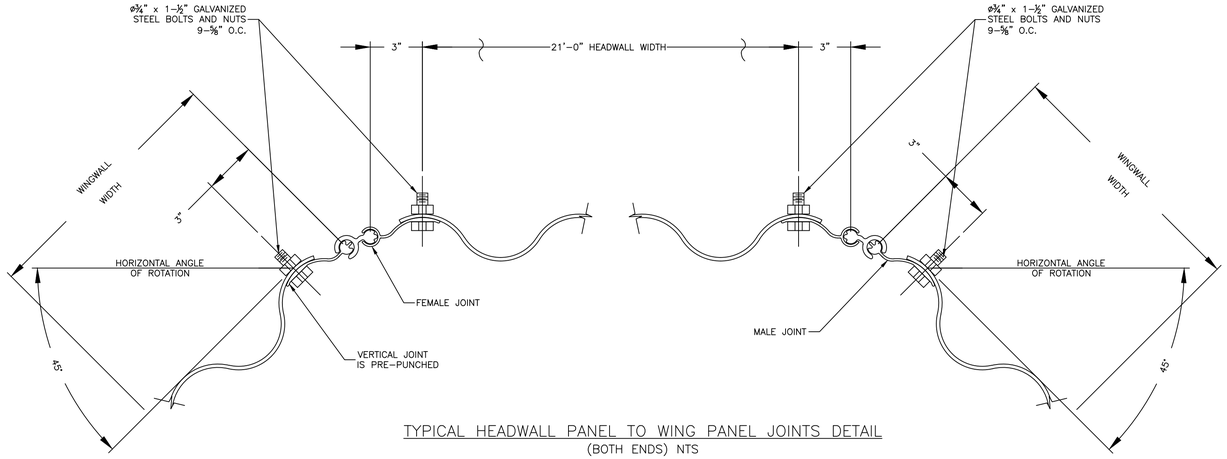

TYPICAL HEADWALL PANEL TO WING PANEL JOINTS DETAIL
(BOTH ENDS) NTS

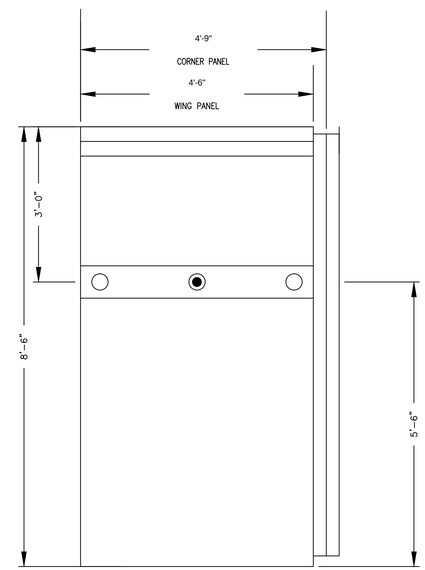

TYPICAL PANEL DETAIL
NTS

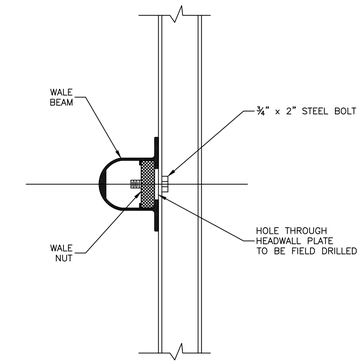

SECTION E–E
WALE BEAM ATTACHMENT – NTS

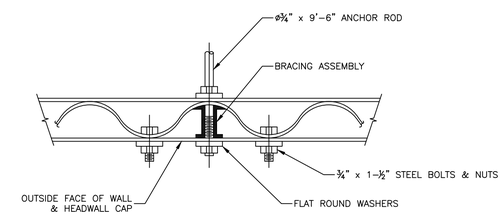

TYPICAL ANCHOR ROD ATTACHMENT DETAIL
NTS

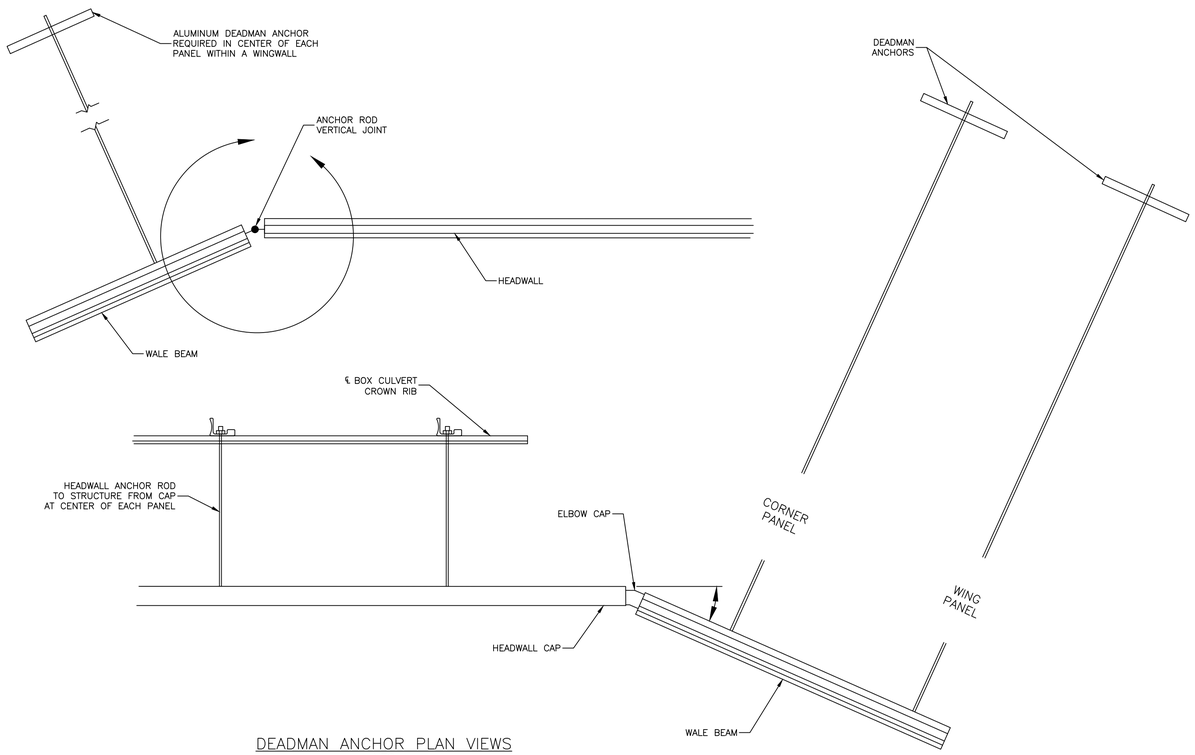

DEADMAN ANCHOR PLAN VIEWS
NTS

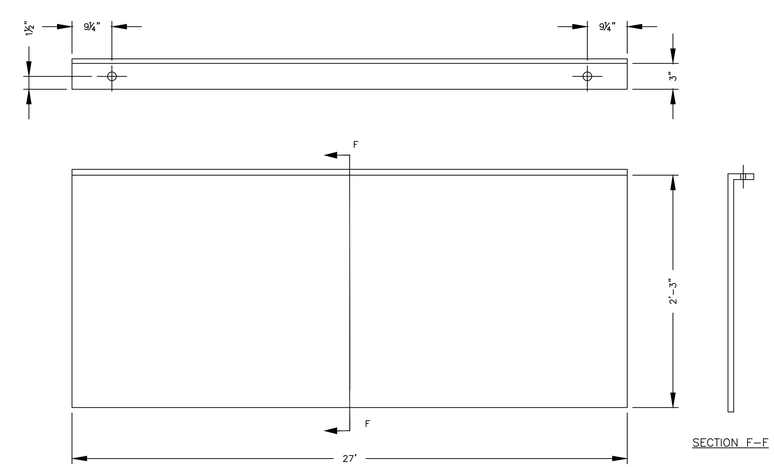

SECTION F–F

TYPICAL ALUMINUM BENT SHEET TOE WALL
(BOTH ENDS) NTS

NO.	DATE	REVISION
2	9/30/16	MOD. EASEMENTS & FINAL PERMIT PLANS
1	4/20/16	ISSUED FOR PRELIMINARY BID OF SITE 1

DRAWN: CTN | DESIGNED: DLM | CHECKED: CIH | APPROVED: BAV

CONSULTING ENGINEERS
28 Gates Street • Suite 100
White River Jct., VT 05001
(802) 296-2570 • Fax: 296-2575
cld@cldengineers.com • www.cldengineers.com
Maine • New Hampshire • Vermont

CLIENT:
TOWN OF NEW LONDON
PUBLIC WORKS DEPARTMENT
184 SOUTH PLEASANT STREET
NEW LONDON, NH 03257

BROOKSIDE CULVERT REPLACEMENT PROJECT
NEW LONDON
NEW HAMPSHIRE
ALUMINUM BOX CULVERT DETAILS

SCALE:	PROJECT NO.
N.T.S.	15–0184
DATE:	DWG. NO.
JAN., 2016	D3

15–0184 BROOKSIDE CULVERTS WETLAND SET.DWG

NESTED W-BEAM RAIL ELEMENTS

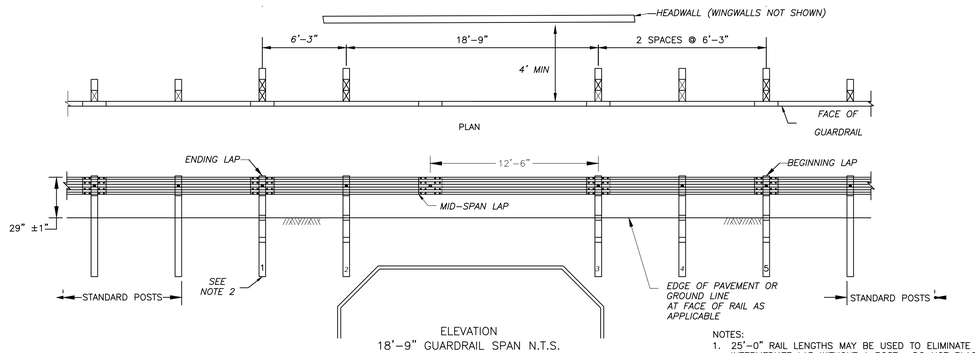

NOTES:
1. 25'-0" RAIL LENGTHS MAY BE USED TO ELIMINATE THE INTERMEDIATE LAP WITHOUT A POST. DO NOT PLACE A LAP WITHOUT A POST UNLESS NEEDED DUE TO GAP LENGTH.
2. POSTS 1 THRU 5 ARE CRT POSTS WITH TWO BLOCKOUTS. ALL OTHER POSTS ARE WOOD OR STEEL.
3. POSTS A THRU D ARE STANDARD WOOD POSTS WITH ONE BLOCKOUT. ALL OTHER POSTS ARE WOOD OR STEEL.

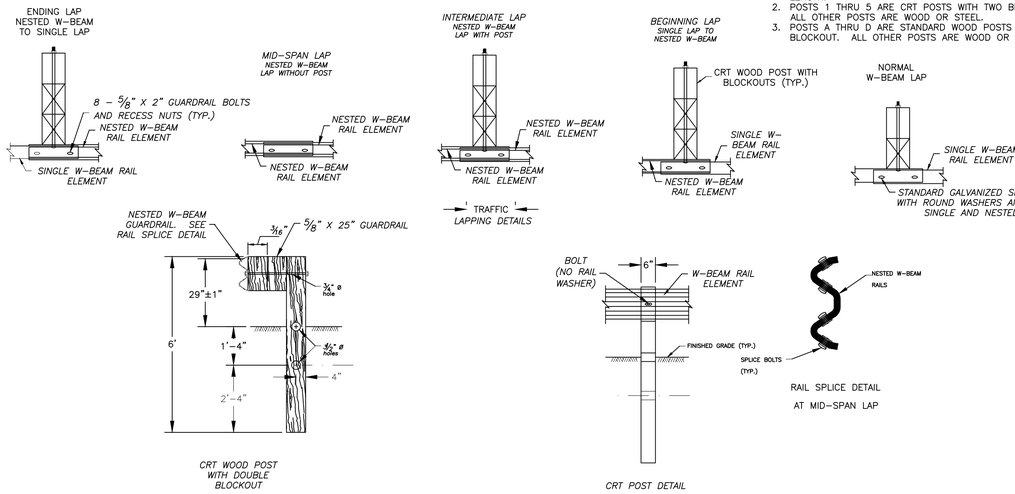

Long Span Guardrail Detail

N.T.S.

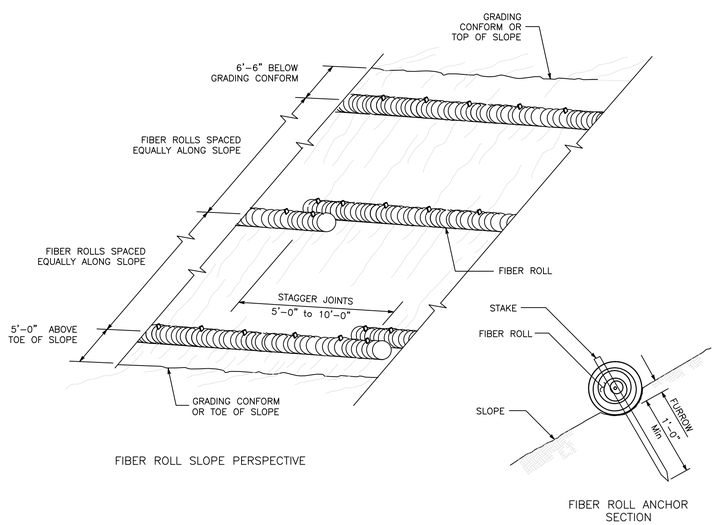

Straw Wattle Roll Erosion Control

N.T.S.

RIPRAP SIZING

FIELD STONE, QUARRY STONE, OR ROCK FRAGMENTS USED FOR RIPRAP SHALL BE SOUND, OF APPROVED QUALITY, AND FREE FROM STRUCTURAL DEFECTS. THESE STONES SHALL HAVE APPROXIMATELY RECTANGULAR SHAPES WITH ONE REASONABLY FLAT SIDE FOR THE TOP SURFACE AND SHALL HAVE MINIMUM DIMENSIONS AND VOLUMES AS LISTED BELOW:

TYPE	DESCRIPTION	75% SIZING Volume	REMAINDER SIZING Volume
Riprap B	$1\frac{1}{2}$ ft Thick	minimum 8 ft^3	

REFERENCE NHDOT STANDARD SPECIFICATIONS FOR ROAD AND BRIDGE CONSTRUCTION 2010 – SECTION 583

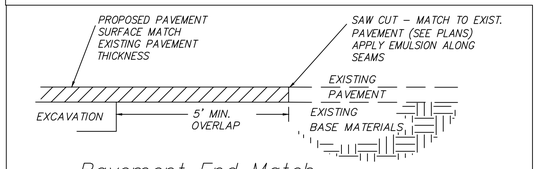

Pavement End Match

N.T.S.

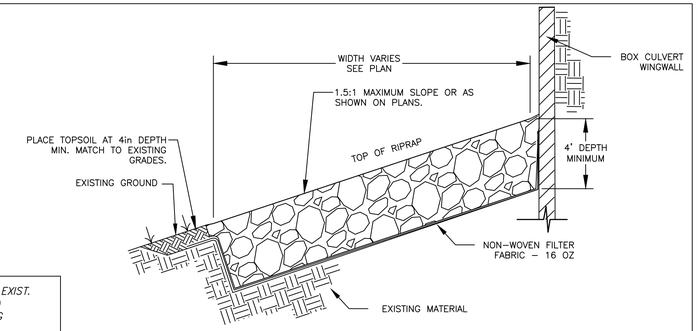

RIP RAP GRADATION D_{50}=1.8 FT
SEE GRADATION CHART

NOTE:
1. GEOTEXTILE FABRICS SHALL BE PROTECTED FROM PUNCTURE OR TEARING DURING THE PLACEMENT OF THE ROCK RIP RAP. DAMAGED AREAS IN THE FABRIC SHALL BE REPAIRED BY PLACING A PIECE OF FABRIC OVER THE DAMAGED AREA OR BY COMPLETE REPLACEMENT OF THE FABRIC. ALL OVERLAPS REQUIRED FOR REPAIRS OR JOINING TWO PIECES OF FABRIC SHALL BE A MINIMUM OF 12".

Standard Riprap Scour Section View

N.T.S.

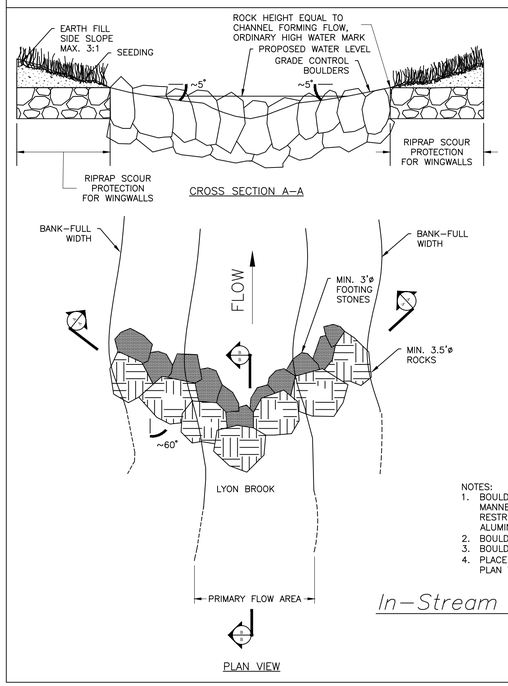

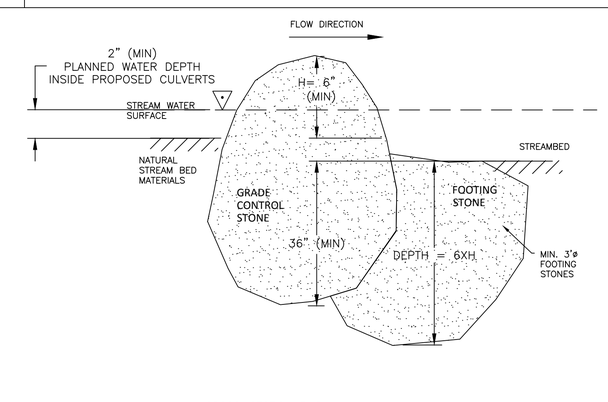

NOTES:
1. BOULDERS SHALL BE A MINIMUM 3.5 FT DIAMETER AND BE PLACED IN A MANNER IN WHICH THE NORMAL FLOW CONDITIONS OF LYON BROOK ARE RESTRICTED TO CREATE A MIN. OF 2 INCHES OF WATER DEPTH INSIDE THE ALUMINUM BOX CULVERT.
2. BOULDER DEPTH BELOW STREAMBED MUST BE A MINIMUM OF 3'.
3. BOULDERS SHALL BE IN CONTACT WITH ADJACENT BOULDERS.
4. PLACE ROCKS IN A "V" FORMATION POINTED AGAINST FLOW AS SHOWN IN PLAN VIEW.

In–Stream Boulder Grade Control Weir

N.T.S.

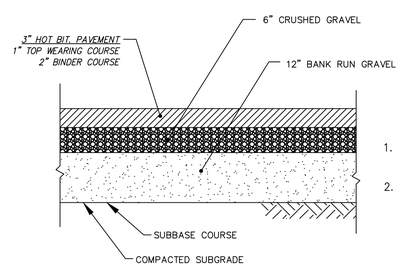

1. ROAD CENTERLINE ELEVATIONS SHALL MATCH EXISTING ELEVATIONS.
2. THICKNESS' SHOWN ABOVE ARE MINIMUM THICKNESS', THE CONTRACTOR SHALL MATCH EXISTING THICKNESS OF PAVEMENTS AND SELECT GRAVELS.

Typical Road Select Materials

N.T.S.

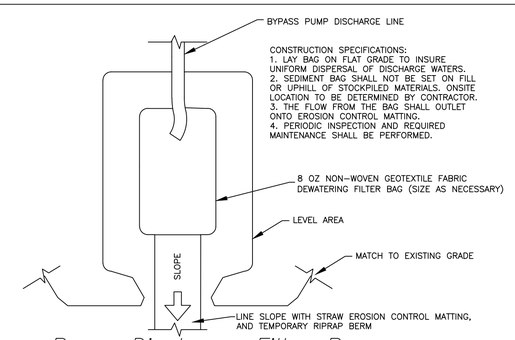

CONSTRUCTION SPECIFICATIONS:
1. LAY BAG ON FLAT GRADE TO INSURE UNIFORM DISPERSAL OF DISCHARGE WATERS.
2. SEDIMENT BAG SHALL NOT BE SET ON FILL OR UPHILL OF STOCKPILED MATERIALS. ONSITE LOCATION TO BE DETERMINED BY CONTRACTOR.
3. THE FLOW FROM THE BAG SHALL OUTLET ONTO EROSION CONTROL MATTING.
4. PERIODIC INSPECTION AND REQUIRED MAINTENANCE SHALL BE PERFORMED.

Pump Discharge Filter Bag

N.T.S.

15–0184 BROOKSIDE CULVERTS WETLAND SET.DWG

NO.	DATE	REVISION
2	9/30/16	MOD. EASEMENTS & FINAL PERMIT PLANS
1	4/20/16	ISSUED FOR PRELIMINARY BID OF SITE 1

DRAWN: CTN | DESIGNED: DLM | CHECKED: CIH | APPROVED: BAV

CONSULTING ENGINEERS
28 Gates Street • Suite 100
White River Jct., VT 05001
(802) 295-2005 • Fax: 295-4949
cld@cldengineers.com • www.cldengineers.com
Maine • New Hampshire • Vermont

CLIENT:
TOWN OF NEW LONDON
PUBLIC WORKS DEPARTMENT
184 SOUTH PLEASANT STREET
NEW LONDON, NH 03257

BROOKSIDE CULVERT REPLACEMENT PROJECT
NEW LONDON
NEW HAMPSHIRE
CONSTRUCTION DETAILS

SCALE: N.T.S.	PROJECT NO. 15–0184
DATE: JAN., 2016	DWG. NO. D4