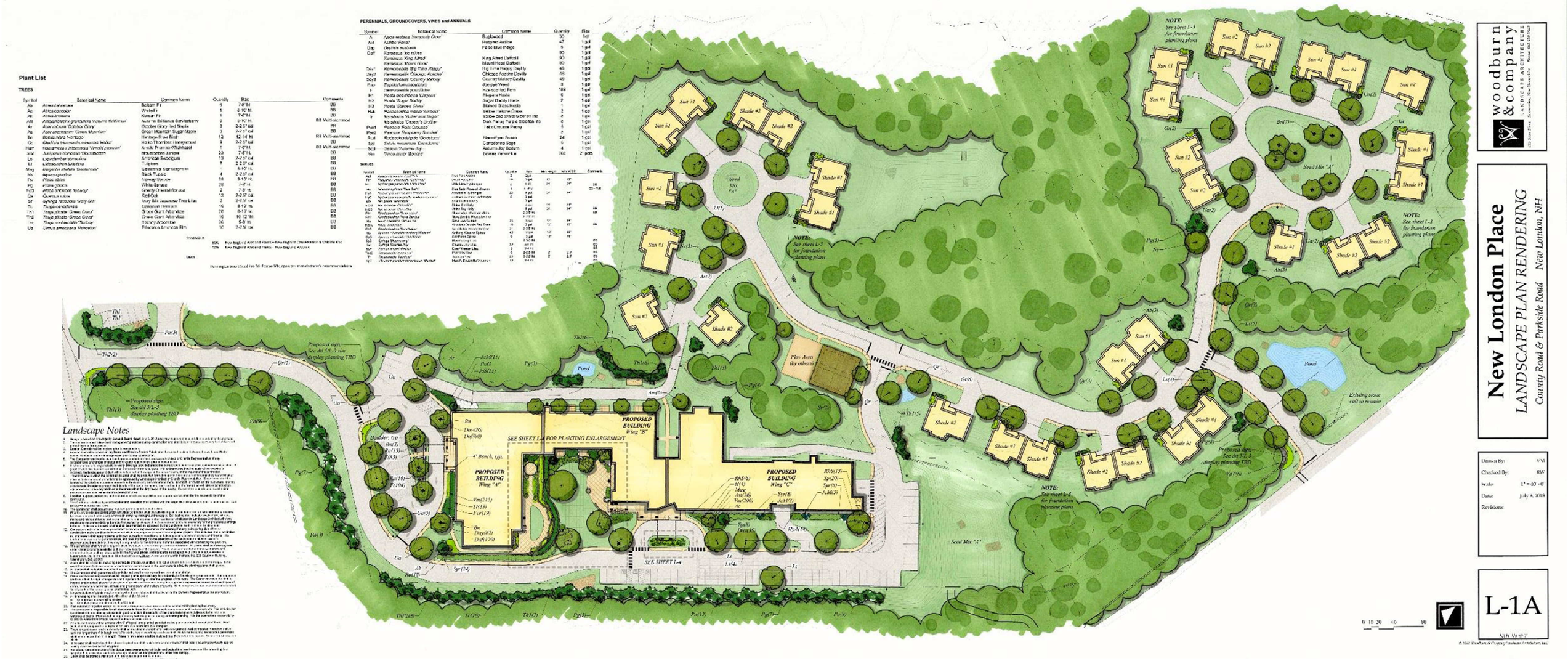

woodburn & company
LANDSCAPE ARCHITECTURE
Since 1994 *reflecting your vision.*

New London Place

Landscape Presentation
8/21/2018

woodburn & company
LANDSCAPE ARCHITECTURE
Since 1994 *reflecting your vision.*

New London Place

Landscape Presentation
8/21/2018

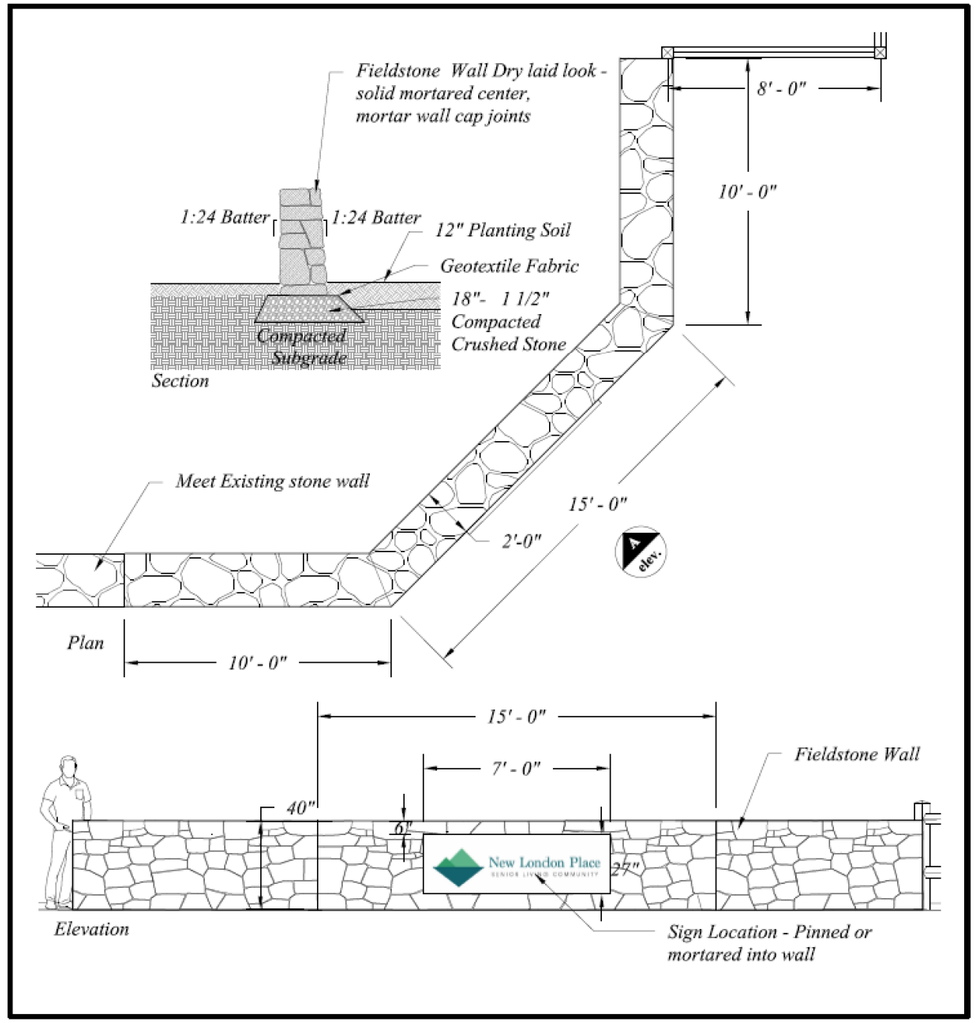

5 **ENTRY WALL WITH SIGN**
Scale: $\frac{1}{4}$"=1'-0"

0 2 4 8

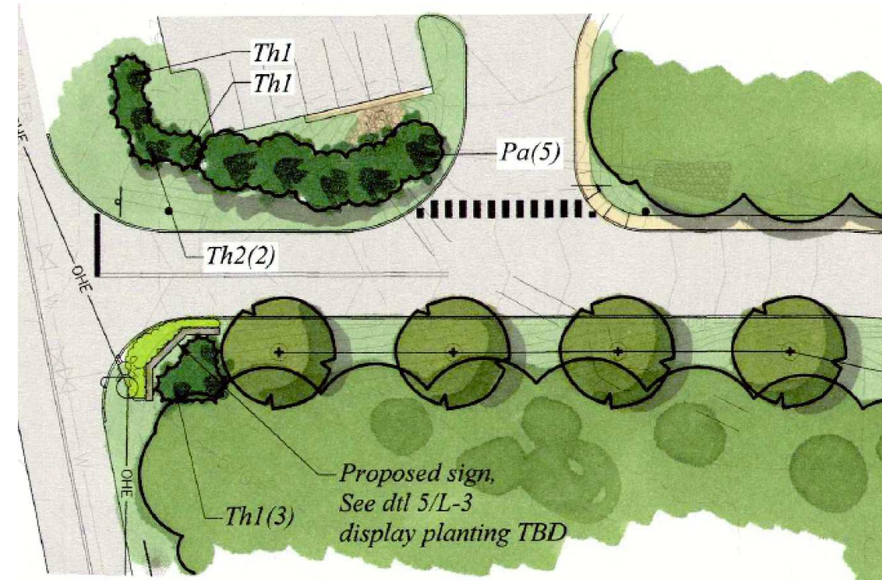

County Road Entry

Parkside Road

woodburn & company
LANDSCAPE ARCHITECTURE
Since 1994 *reflecting your vision.*

New London Place

Landscape Presentation
8/21/2018

COTTAGES - Plant List

SHADE UNIT #1

Symbol	Botanical Name	Common Name	Quantity per unit	Number of Units	Total	Size	Comments
A	*Enkianthus campanulatus*	Redwein Enkianthus	1	9	9	4-5' ht.	BB
B	*Rhododendron 'Aglo'*	Aglo Rhododendron	3	9	27	2-2.'ht'	BB
C	Pieris japonica 'Cavatine'	Cavatine Andromeda	3	9	27	18 - 24" HT	BB
D	Azalea kiusianum 'Best Pink'	Best Pink Azalea	4	9	36	3 GAL	
VM	Vinca minor 'Bowles'	Bowles Periwinkle	70	9	630	TRAYS	100 PER TRAY

SHADE UNIT #2

Symbol	Botanical Name	Common Name	Quantity per unit	Number of Units	Total	Size	Comments
A	*Hamamelis x intermedia "Arnold promise'*	Arnold Promise Witchhazel	1	8	8	6-7' HT.	BB
B	*Rhododendron 'Scintillation'*	Scintillation Rhododendron	3	8	24	2-2.5' HT.	BB
C	*Buxus microphylla 'Winter Gem'*	Winter Gem Boxwood	3	8	24	18-24"	BB
D	*Hosta 'Frances Williams'*	Frances Williams Hosta	4	8	32	1 GAL	
Vm	Vinca minor 'Bowles'	Bowles Periwinkle	70	8	560	TRAYS	100 PER TRAY

SUN UNIT #1

Symbol	Botanical Name	Common Name	Quantity per unit	Number of Units	Total	Size	Comments
A	*Hibiscus syriacus 'Ardens'*	Double Blue Rose-of -Sharon	3	9	27	4-5' ht.	BB
B	*Hydrangea macrophylla 'Endless Summer'*	Endless Summer Hydrangea	3	9	27	2-2.'ht'	BB
C	Rhododendron myrtifolium	Myrtifolium Rhododendron	4	9	36	18 - 24" HT	BB
D	Rosa 'Knock-out'	Double Red Knockout Roase	4	9	36	3 GAL	
Vm	Vinca minor 'Bowles'	Bowles Periwinkle	70	9	630	TRAYS	100 PER TRAY

SUN UNIT #2

Symbol	Botanical Name	Common Name	Quantity per unit	Number of Units	Total	Size	Comments
A	Syringa 'President Lincoln'	President Lincoln Lilac	1	7	7	4-5' ht.	BB
B	Hydrangea ' Invinciball'	Invinciball Hydrangea	3	7	21	2-2.'ht'	BB
C	Rhododendron ' Mary Flemming'	Mary Fleming Rhododendron	3	7	21	18 - 24" HT	BB
D	Spirea japonica 'Magic Carpet'	Magic Carpet Spirea	4	7	28	3 GAL	
Vm	Vinca minor 'Bowles'	Bowles Periwinkle	70	7	490	TRAYS	100 PER TRAY

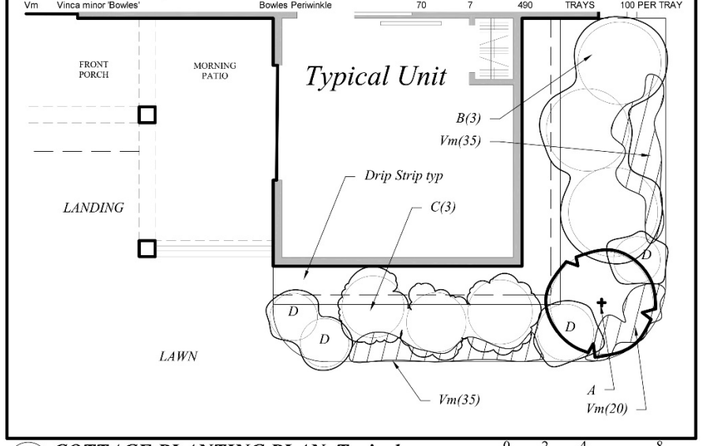

6 ***COTTAGE PLANTING PLAN, Typical***
Scale: $\frac{1}{4}$"=1'-0"

0 2 4 8

© 201

Cottage Plantings

woodburn & company
LANDSCAPE ARCHITECTURE
Since 1994 *reflecting your vision.*

New London Place

Landscape Presentation
8/21/2018

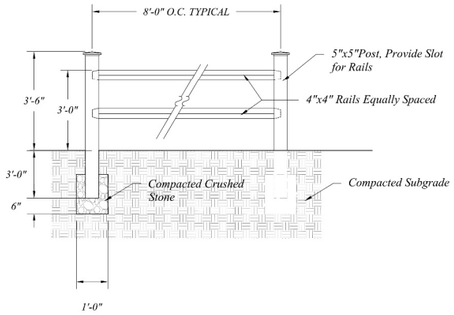

1 **2 RAIL DIAMOND RAIL CEDAR FENCE**
Scale: ½"=1'-0"

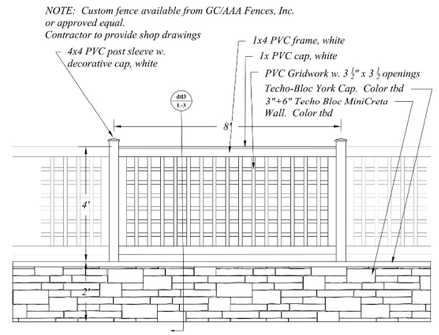

2 **MEMORY GARDEN WALL AND FENCE, elevation**
Scale: ¼"=1'-0"

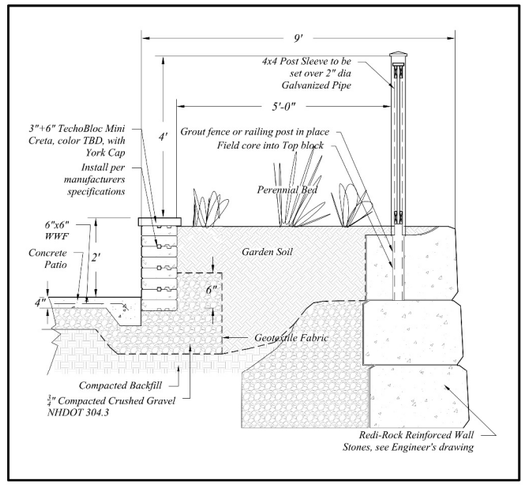

3 **MEMORY GARDEN WALL AND FENCE, section**
Scale: NTS

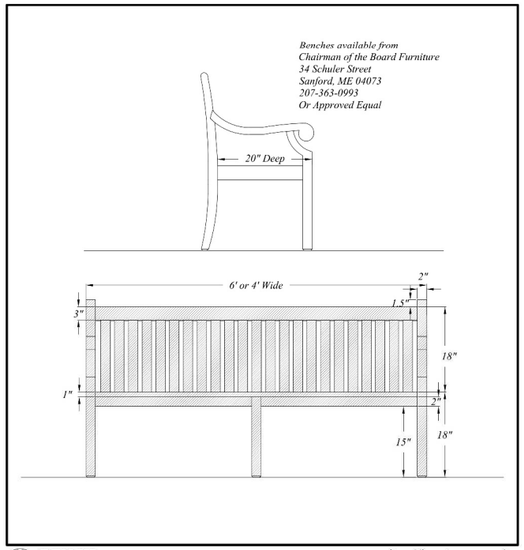

4 **BENCH**
Scale: 1"=1'-0"

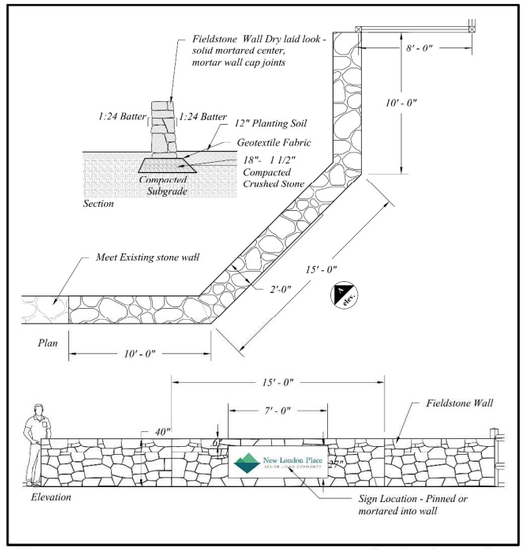

5 **ENTRY WALL WITH SIGN**
Scale: ¼"=1'-0"

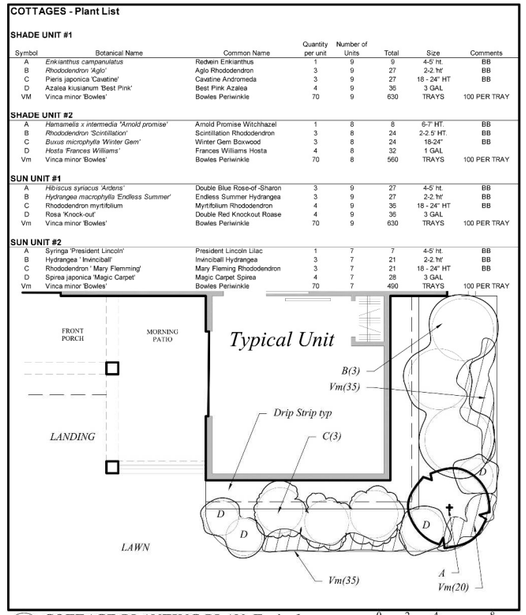

6 **COTTAGE PLANTING PLAN, Typical**
Scale: ¼"=1'-0"

COTTAGES - Plant List

SHADE UNIT #1

Symbol	Botanical Name	Common Name	Quantity per unit	Number of Units	Total	Size	Comments
A	*Erikianthus campanulatus*	Redwin Erikianthus	1	9	9	4-5' ht.	BB
B	*Rhododendron 'Aglo'*	Aglo Rhododendron	3	9	27	2-2.ht'	BB
C	*Pieris japonica 'Cavatine'*	Cavatine Andromeda	3	9	27	18 - 24" HT	BB
D	*Azalea kiusianum 'Best Pink'*	Best Pink Azalea	4	9	36	3 GAL	
VM	*Vinca minor 'Bowles'*	Bowles Periwinkle	70	9	630	TRAYS	100 PER TRAY

SHADE UNIT #2

Symbol	Botanical Name	Common Name	Quantity per unit	Number of Units	Total	Size	Comments
A	*Hamamelis x intermedia 'Arnold promise'*	Arnold Promise Witchhazel	1	8	8	6-7' HT.	BB
B	*Rhododendron 'Scintillation'*	Scintillation Rhododendron	3	8	24	2-2.5 HT.	BB
C	*Buxus microphylla 'Winter Gem'*	Winter Gem Boxwood	3	8	24	18-24"	BB
D	*Hosta 'Frances Williams'*	Frances Williams Hosta	4	8	32	1 GAL	
Vm	*Vinca minor 'Bowles'*	Bowles Periwinkle	70	8	560	TRAYS	100 PER TRAY

SUN UNIT #1

Symbol	Botanical Name	Common Name	Quantity per unit	Number of Units	Total	Size	Comments
A	*Hibiscus syriacus 'Ardoins'*	Double Blue Rose-of-Sharon	3	9	27	4-5' ht.	BB
B	*Hydrangea macrophylla 'Endless Summer'*	Endless Summer Hydrangea	3	9	27	2-2.ht'	BB
C	*Rhododendron myrtifolium*	Myrtifolium Rhododendron	4	9	36	18 - 24" HT	BB
D	*Rosa 'Knock-out'*	Double Red Knockout Roase	4	9	36	3 GAL	
Vm	*Vinca minor 'Bowles'*	Bowles Periwinkle	70	9	630	TRAYS	100 PER TRAY

SUN UNIT #2

Symbol	Botanical Name	Common Name	Quantity per unit	Number of Units	Total	Size	Comments
A	*Syringa 'President Lincoln'*	President Lincoln Lilac	1	7	7	4-5' ht.	BB
B	*Hydrangea ' Invinciball'*	Invinciball Hydrangea	3	7	21	2-2.ht'	BB
C	*Rhododendron ' Mary Flemming'*	Mary Fleming Rhododendron	3	7	21	18 - 24" HT	BB
D	*Spirea japonica 'Magic Carpet'*	Magic Carpet Spirea	4	7	28	3 GAL	
Vm	*Vinca minor 'Bowles'*	Bowles Periwinkle	70	7	490	TRAYS	100 PER TRAY

woodburn & company
LANDSCAPE ARCHITECTURE
103 Kent Place Newmarket, New Hampshire Phone: 603.659.5949

New London Place

LANDSCAPE DETAILS

County Road & Parkside Road New London, NH

Drawn By:	CH
Checked By:	RW
Scale:	as shown
Date:	July 3, 2018
Revisions:	

L-3

Sheet 38 of 48

© 2018 Woodburn & Company Landscape Architecture, LLC

woodburn & company
LANDSCAPE ARCHITECTURE
Since 1994 reflecting your vision.

New London Place

Landscape Presentation
8/21/2018

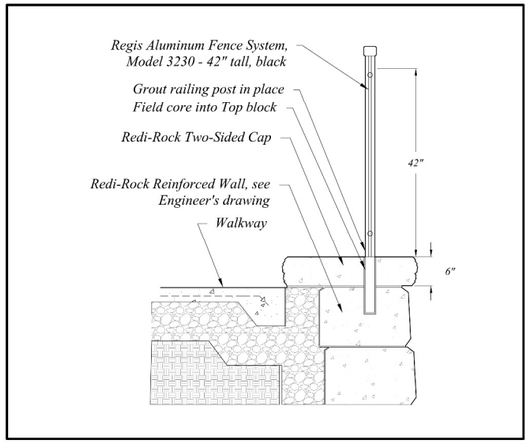

1 **ALUMINUM PICKET FENCE RAILING**
Scale: 1"=1'-0"

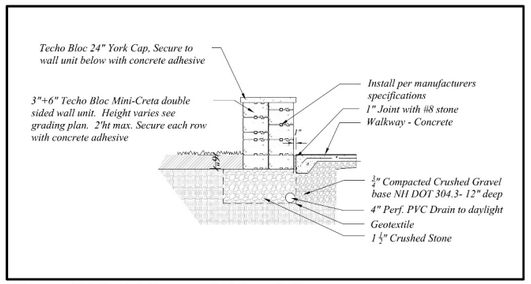

2 **Two Sided Mini Creta Wall with York Caps**
Scale: ½" = 1' - 0"

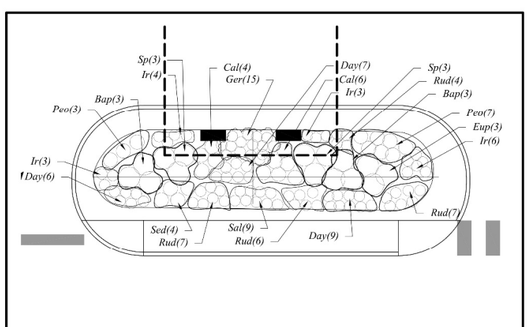

3 **PLANTING AT WING "B" / "C" ENTRY**
Scale: ½" = 1' - 0"

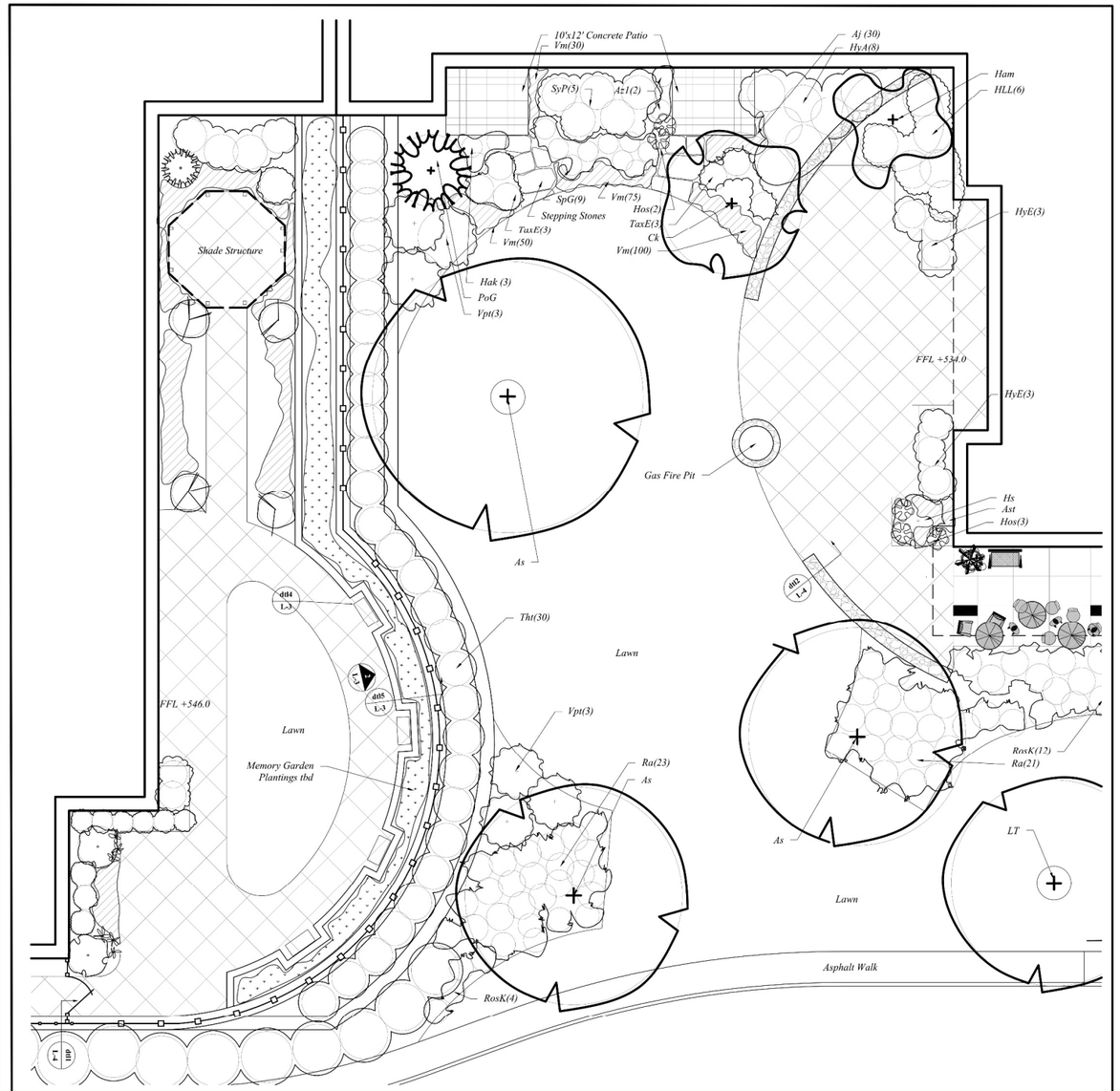

4 **MEMORY GARDEN AND CAFE AREA PLANTING PLAN**
Scale: ⅛" = 1'-0"

woodburn & company
LANDSCAPE ARCHITECTURE
103 Kent Place Newmarket, New Hampshire Phone: 603.659.5949

New London Place
LANDSCAPE DETAILS
County Road & Parkside Road New London, NH

Drawn By:	CH
Checked By:	RW
Scale:	as shown
Date:	July 3, 2018
Revisions:	

L-4

Sheet 39 of 48

© 2018 Woodburn & Company Landscape Architecture, LLC

woodburn & company
LANDSCAPE ARCHITECTURE
Since 1994 *reflecting your vision.*

New London Place

Landscape Presentation
8/21/2018

Native Plants

Trees

Princeton Elm
Red Maple
Sugar Maple
Red Oak
River Birch
Tupelo
Tulip Tree
Balsam Fir
Hemlock
White Fir
Witch Hazel
Sweet Gum

Shrubs

Annabelle Hydrangea
Grow-Low Sumac
Marie's Doublefile Viburnum
Inkberry

Perennials

Baptisia
Black Eyed Susan
Eupatorium
Hay Scented Fern
Switch Grass
Varied Fescues
Asters
Milkweed
Sunflower
Vervain
Carex
Sedges