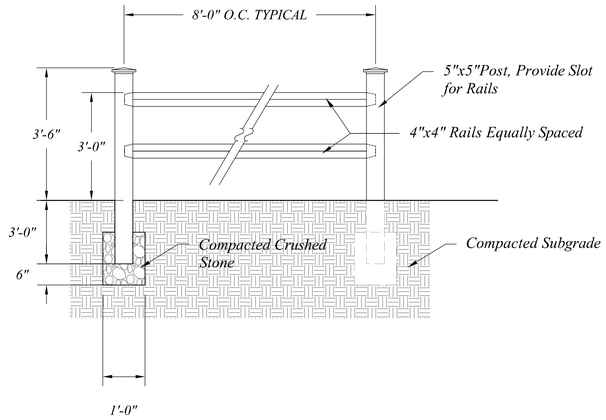

1 2 RAIL DIAMOND RAIL CEDAR FENCE

Scale: ½"=1'-0"

0 1 2 4

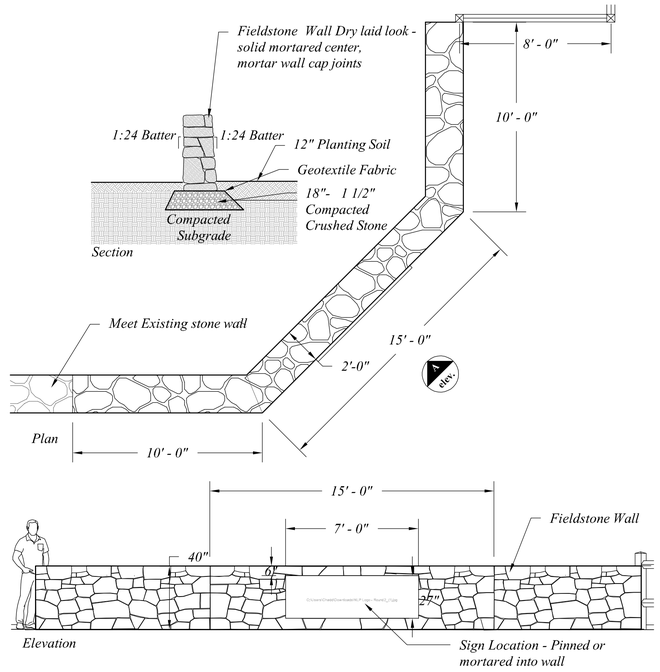

5 ENTRY WALL WITH SIGN

Scale: ¼"=1'-0"

0 2 4 8

COTTAGES - Plant List

SHADE UNIT #1

Symbol	Botanical Name	Common Name	Quantity per unit	Number of Units	Total	Size	Comments
A	*Enkianthus campanulatus*	Redvein Enkianthus	1	9	9	4-5' ht.	BB
B	*Rhododendron 'Aglo'*	Aglo Rhododendron	3	9	27	2-2.'ht'	BB
C	Pieris japonica 'Cavatine'	Cavatine Andromeda	3	9	27	18 - 24" HT	BB
D	Azalea kiusianum 'Best Pink'	Best Pink Azalea	4	9	36	3 GAL	
VM	Vinca minor 'Bowles'	Bowles Periwinkle	70	9	630	TRAYS	100 PER TRAY

SHADE UNIT #2

Symbol	Botanical Name	Common Name	Quantity per unit	Number of Units	Total	Size	Comments
A	*Hamamelis x intermedia 'Arnold promise'*	Arnold Promise Witchhazel	1	8	8	6-7' HT.	BB
B	*Rhododendron 'Scintillation'*	Scintillation Rhododendron	3	8	24	2-2.5' HT.	BB
C	*Buxus microphylla 'Winter Gem'*	Winter Gem Boxwood	3	8	24	18-24"	BB
D	*Hosta 'Frances Williams'*	Frances Williams Hosta	4	8	32	1 GAL	
Vm	Vinca minor 'Bowles'	Bowles Periwinkle	70	8	560	TRAYS	100 PER TRAY

SUN UNIT #1

Symbol	Botanical Name	Common Name	Quantity per unit	Number of Units	Total	Size	Comments
A	*Hibiscus syriacus 'Ardens'*	Double Blue Rose-of -Sharon	3	9	27	4-5' ht.	BB
B	*Hydrangea macrophylla 'Endless Summer'*	Endless Summer Hydrangea	3	9	27	2-2.'ht'	BB
C	Rhododendron myrtifolium	Myrtifolium Rhododendron	4	9	36	18 - 24" HT	BB
D	Rosa 'Knock-out'	Double Red Knockout Roase	4	9	36	3 GAL	
Vm	Vinca minor 'Bowles'	Bowles Periwinkle	70	9	630	TRAYS	100 PER TRAY

SUN UNIT #2

Symbol	Botanical Name	Common Name	Quantity per unit	Number of Units	Total	Size	Comments
A	Syringa 'President Lincoln'	President Lincoln Lilac	1	7	7	4-5' ht.	BB
B	Hydrangea ' Invinciball'	Invinciball Hydrangea	3	7	21	2-2.'ht'	BB
C	Rhododendron ' Mary Flemming'	Mary Fleming Rhododendron	3	7	21	18 - 24" HT	BB
D	Spirea japonica 'Magic Carpet'	Magic Carpet Spirea	4	7	28	3 GAL	
Vm	Vinca minor 'Bowles'	Bowles Periwinkle	70	7	490	TRAYS	100 PER TRAY

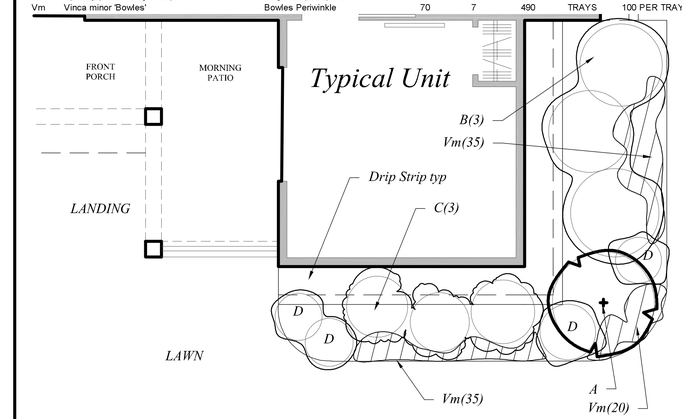

6 COTTAGE PLANTING PLAN, Typical

Scale: ¼"=1'-0"

0 2 4 8

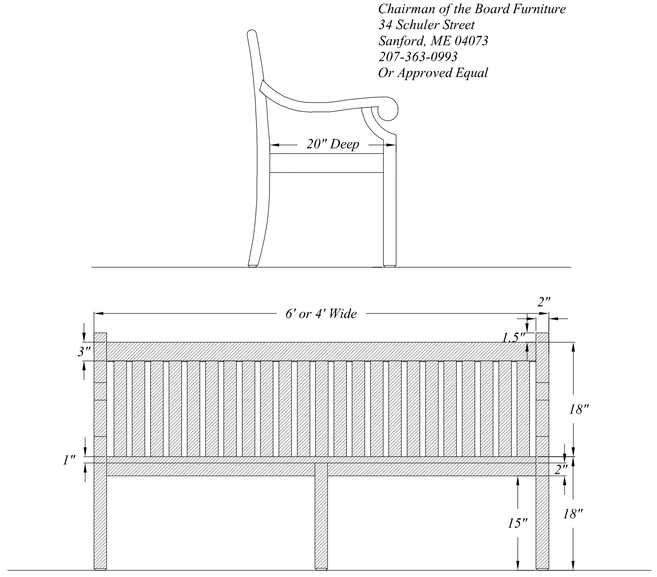

4 BENCH

Scale: 1"=1'-0"

0 1/2 1 2

woodburn & company
LANDSCAPE ARCHITECTURE
103 Kent Place Newmarket, New Hampshire Phone: 603.659.5949

New London Place

LANDSCAPE DETAILS

County Road & Parkside Road New London, NH

Drawn By:	VM
Checked By:	RW
Scale:	as shown
Date:	July 3, 2018
Revisions:	November 20, 2018

L-3

Sheet 38 of 48

© 2018 Woodburn & Company Landscape Architecture, LLC