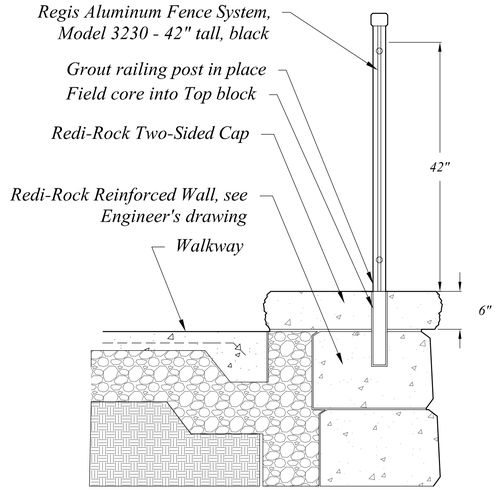

1 ALUMINUM PICKET FENCE RAILING
Scale: 1"=1'-0"

0 1/2 1 2

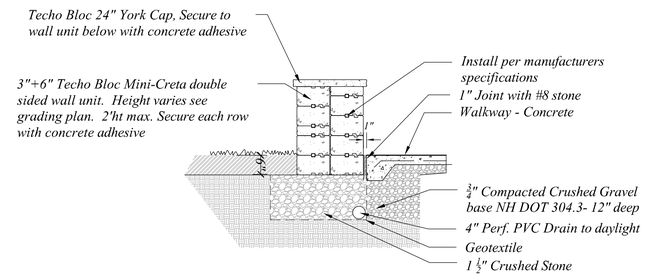

2 Two Sided Mini Creta Wall with York Caps
Scale: ½" = 1' - 0"

0 1 2 4

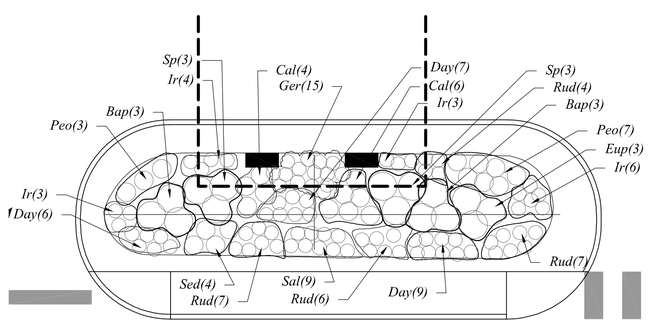

3 PLANTING AT WING "B" / "C" ENTRY
Scale: ⅛" = 1' - 0"

0 2 4 8 16

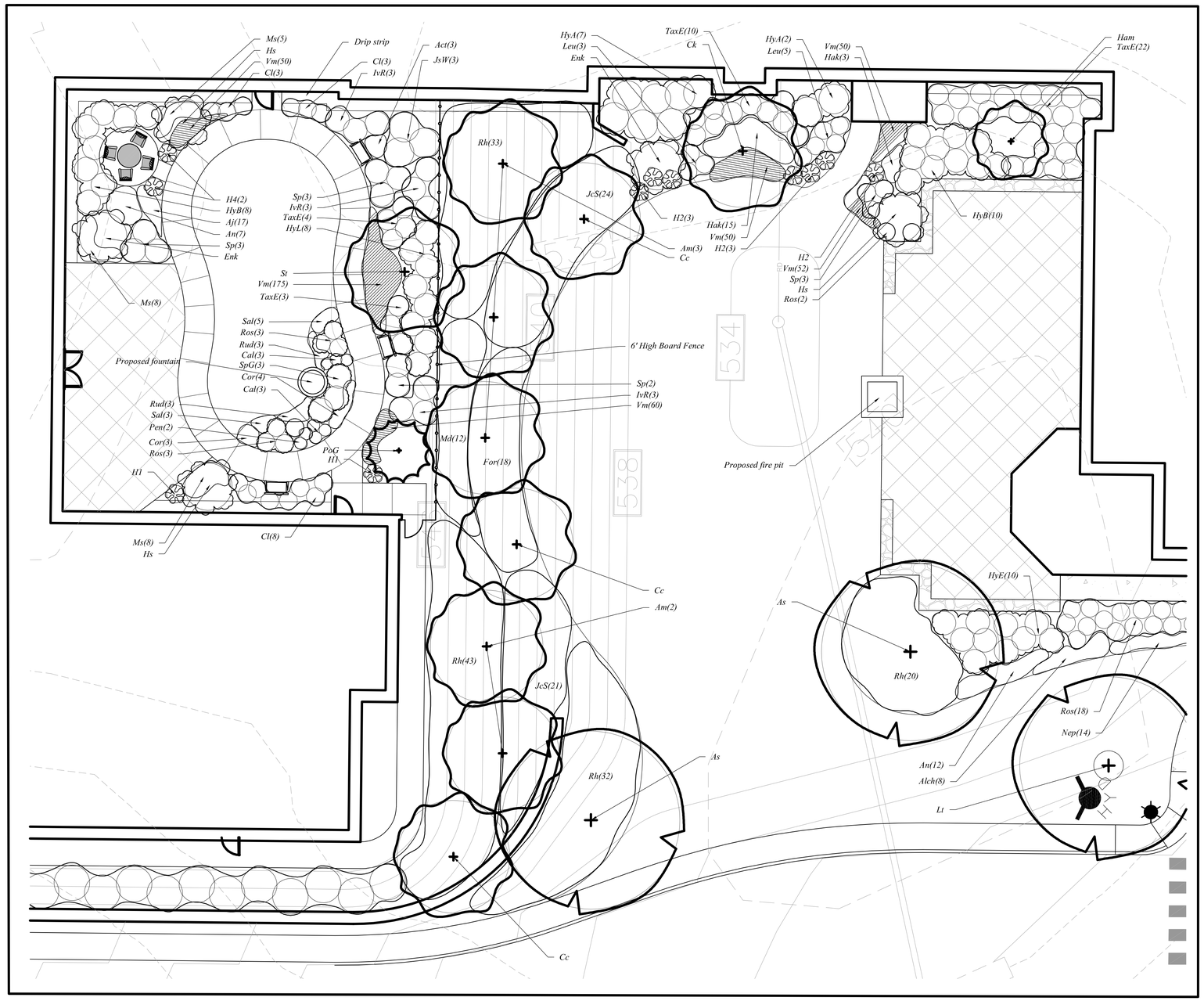

4 MEMORY GARDEN AND CAFE AREA PLANTING PLAN
Scale: 1"=10'-0"

0 2 5 10 20

woodburn & company
LANDSCAPE ARCHITECTURE
103 Kent Place Newmarket, New Hampshire Phone: 603.659.5949

New London Place

LANDSCAPE DETAILS

County Road & Parkside Road New London, NH

Drawn By:	VM
Checked By:	RW
Scale:	as shown
Date:	July 3, 2018
Revisions:	November 20, 2018

L-4

Sheet 39 of 48

© 2018 Woodburn & Company Landscape Architecture, LLC