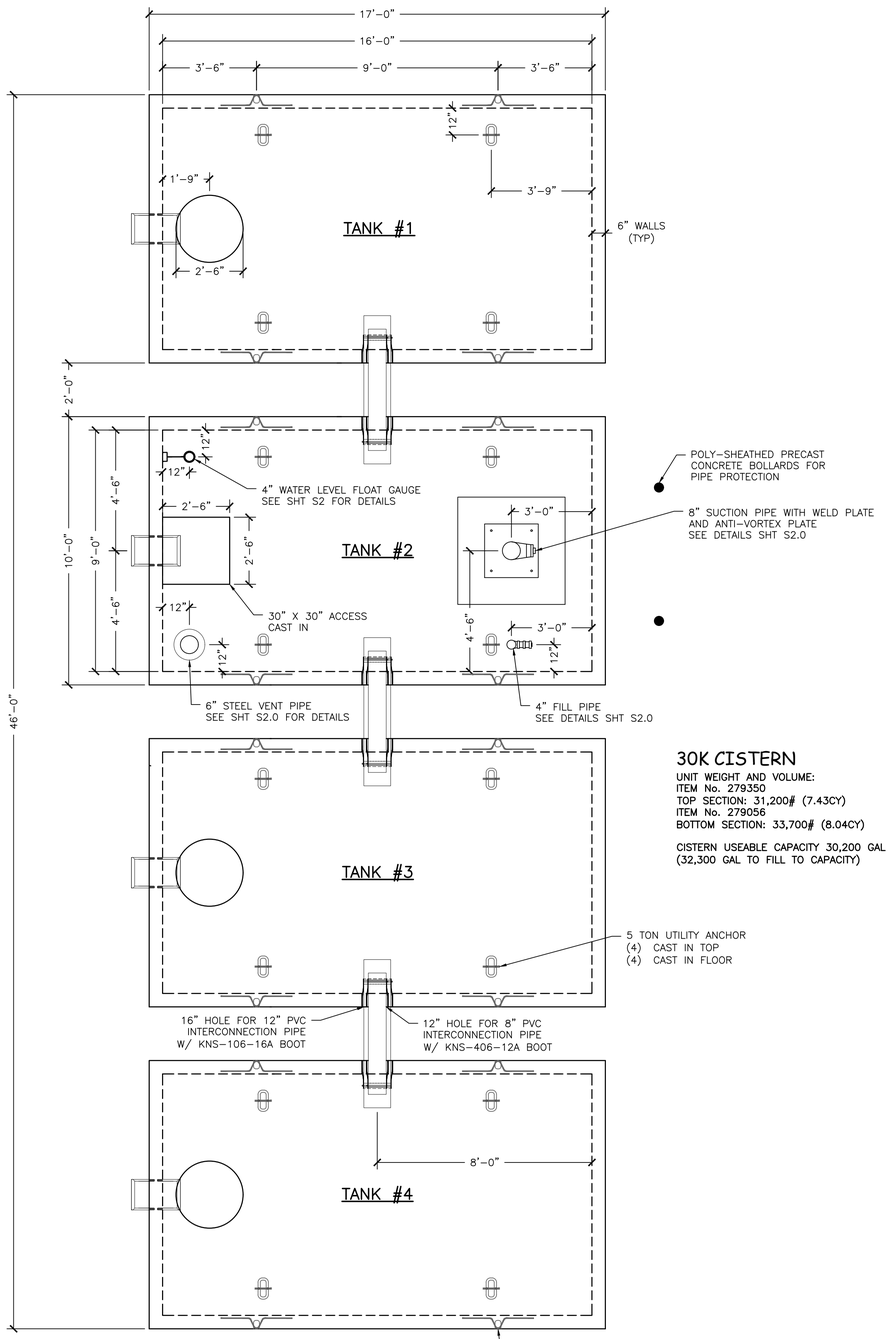


1 S1.0 PLAN VIEW
⅜" = 1'-0"

## 30K CISTERN

UNIT WEIGHT AND VOLUME:
ITEM No. 279350
TOP SECTION: 31,200# (7.43CY)
ITEM No. 279056
BOTTOM SECTION: 33,700# (8.04CY)

CISTERN USEABLE CAPACITY 30,200 GAL
(32,300 GAL TO FILL TO CAPACITY)

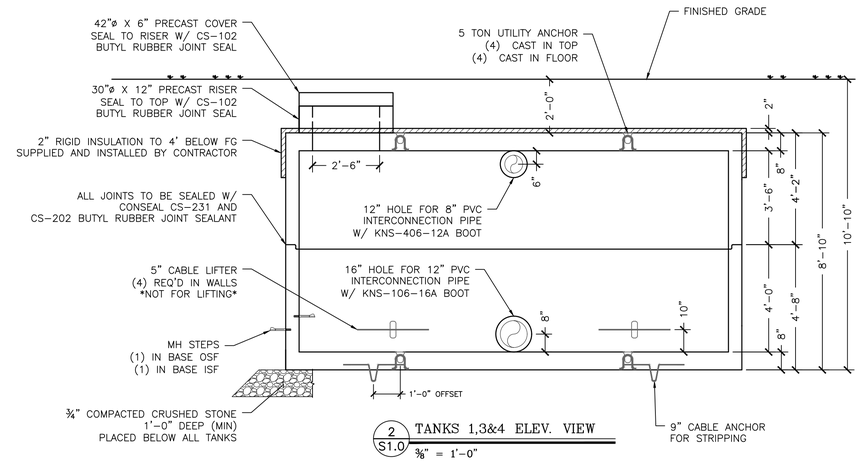


2 S1.0 TANKS 1,3&4 ELEV. VIEW
⅜" = 1'-0"

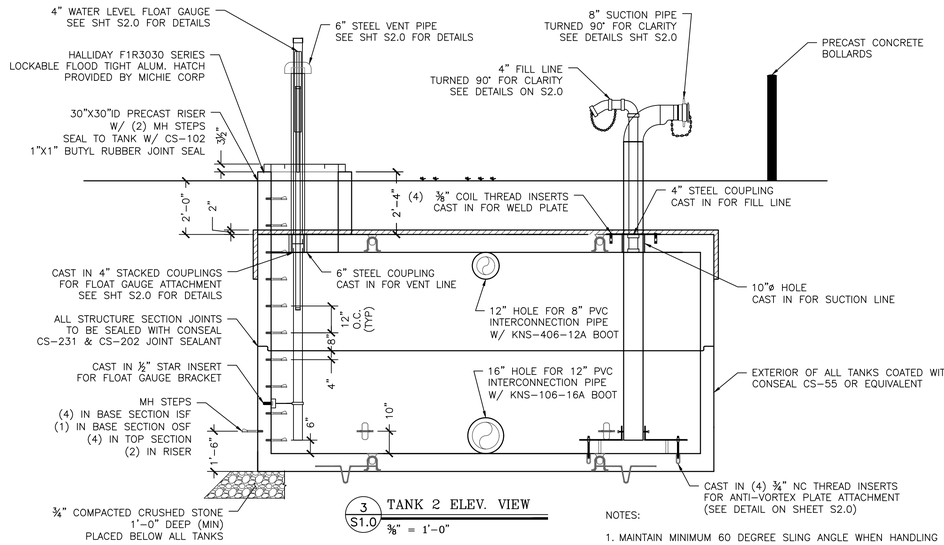


3 S1.0 TANK 2 ELEV. VIEW
⅜" = 1'-0"

## APPROVAL BLOCK

FIRE DEPARTMENT: (IF APPLICABLE) _____ _____ DATE
_____ FIRM NAME

CUSTOMER: _____ _____ DATE
_____ TITLE

| BILL OF MATERIALS | | | | | |
|---|---|---|---|---|---|
| QTY | DESCRIPTION | IN STOCK | ORDERED FROM | DATE ORDERED | DATE DELIVERED |
| | **ITEMS CAST-IN** | | | | |
| 1 | 6" COUPLING (VENT PIPE) | | | | |
| 1 | 1/2" STAR INSERT FOR FLOAT GAUGE BRACKET | | | | |
| 4 | 3/8" NC THREADED INSERTS (FOR WELD PLATE) | | | | |
| 4 | 3/4" NC THREADED INSERTS (FOR ANTI VORTEX ASS'Y ) | | | | |
| 1 | 4" STEEL COUPLING (FOR FILL PIPE) | | | | |
| 1 | 4" STEEL COUPLING (FOR TOP SECTION FLOAT GAUGE) | | | | |
| 1 | 4" PVC COUPLING (FOR FLOAT GAUGE BOTTOM SECTION) | | | | |
| 32 | 5 TON UTILITY ANCHOR | | | | |
| 16 | 5" CABLE LIFTER | | | | |
| 16 | 9" CABLE LIFTER | | | | |
| | **ITEMS FOR PRESHIPPING PREP** | | | | |
| 1 | ANTI VORTEX PLATE ASSEMBLY | | | | |
| 4 | 3/4" THREADED ROD 8" LONG W NUT AND WASHER (VORTEX PL ATT.) | | | | |
| 220LF | CS-231 1"X1" CONTROLLED EXP. WATERSTOP SEALANT (14' ROLLS) | | | | |
| 220LF | CS-202 1 1/2" BUTY L W/ RED ADHESIVE (10' ROLLS) | | | | |
| 40Gals. | LN-12 ASPHALTIC COATING | | | | |
| 6 | KNS 406-12A BOOT | | | | |
| 6 | KNS 106-16A BOOT | | | | |
| 3 Gals. | TREMCO | | | | |
| 1 | 24"X24"X1/4" SUCTION WELD PLATE | | | | |
| 4 | 3/8" ANCHOR BOLT (FOR WELD PLATE) | | | | |
| 17 | POLY PROPY LENE COATED MANHOLE STEPS | | | | |
| | **ITEMS TO SHIP TO THE JOB** | | | | |
| 1 | FLOAT GAUGE ASSEMBLY | | | | |
| 1 | 4" GALV. PIPE CLAMP W/ THREADED ROD/ BOLTS/ NUTS | | | | |
| 1 | SUCTION ASSEMBLY | | | | |
| 1 | FILL A SSEMBLY | | | | |
| 1 | VENT ASSEMBLY | | | | |
| 1 | 24"X24"X1/4" SUCTION WELD PLATE | | | | |
| 4 | 3/8" ANCHOR BOLT (FOR WELD PLATE) | | | | |
| 3 | 8" PVC INTERCONNECTION PIPE (4'-6" LONG) | | | | |
| 6 | EXTERNAL PIPE CLAMP FOR 8" PIPE | | | | |
| 6 | INTERNAL EXPANSION BAND FOR 8" BOOT | | | | |
| 3 | 12" SDR 35 INTERCONNECTION PIPE (4'-6" LONG) | | | | |
| 6 | EXTERNAL PIPE CLAMP FOR 12" PIPE | | | | |
| 6 | INTERNAL EXPANSION BAND FOR 12" BOOT | | | | |
| 3 | 42" X 6" PRECAST COVERS | | | | |
| 3 | 30" DIA. ID x 12" PRECAST RISERS | | | | |
| 1 | 30" X 30" X 2'-4" PRECAST RISER | | | | |
| 36LF | CS102 BUTY L RUBBER TO (SEAL RISER AND COVER) | | | | |
| 1 | HALLIDAY F1R3030 ALUMINUM HATCH | | | | |

LIST OF SHEETS:

S1.0 - CISTERN PLAN AND ELEVATIONS

S2.0 - CISTERN MISC. DETAILS

S3.0 - CISTERN REINFORCING DETAILS

NOTES:

1. MAINTAIN MINIMUM 60 DEGREE SLING ANGLE WHEN HANDLING PRECAST COMPONENTS.
2. PRECAST COMPONENTS SHALL REACH A MINIMUM COMPRESSIVE STRENGTH OF 3,000 PSI PRIOR TO STRIPPING, AND THE MINIMUM DESIGN COMPRESSIVE STRENGTH PRIOR TO SHIPPING, UNLESS OTHERWISE APPROVED.
3. CONCRETE SHALL BE SELF-CONSOLIDATING CONFORMING TO ASTM C260 WITH A MINIMUM 28-DAY COMPRESSIVE STRENGTH OF 5,000 PSI. AGGREGATE SHALL CONFORM TO ASTM C-33 WITH A MAXIMUM DIAMETER OF ¾". CEMENT SHALL CONFORM TO ASTM C150.
4. REINFORCING SHALL BE 60,000 PSI GRADE 60 DEFORMED BLACK BARS CONFORMING TO ASTM A-615. ALL BARS SHALL BE BENT COLD.
5. ALL JOINTS AND VOIDS SHALL BE FILLED WITH NON-SHRINK GROUT. VERTICAL SURFACE VOIDS MAY BE FILLED WITH FOAM SEALANT.
6. TANK DESIGNED USING THE FOLLOWING PROPERTIES:
   - DESIGN LOAD: ASHTO HS-20
   - EARTH COVER:
     0-2' FOR WATER TABLE 5' BELOW GRADE.
     0-2.5' FOR WATER TABLE 3.5'-5' BELOW GRADE.
   - LATERAL EARTH PRESSURES: DRY - 40PCF; SAT - 81PCF
   - ADEQUACY OF THE ABOVE INFORMATION SHALL BE REVIEWED FOR SITE SPECIFIC CONDITIONS BY QUALIFIED LICENSED PROFESSIONAL ENGINEER.
7. ALL EXCAVATED HOLES SHALL BE PREPARED PER OSHA STANDARDS; NOTHING IN THESE PLANS SHALL BE CONSTRUED TO PROVIDE EXCAVATION GUIDANCE. TANK EXCAVATION SHALL BE KEPT DEWATERED THROUGHOUT INSTALLATION AND BACKFILL OPERATIONS.
8. STRUCTURE SHALL BE PLACED AT ELEVATIONS SHOWN ON THE DRAWINGS ON A MINIMUM OF 12" OF COMPACTED CRUSHED STONE WITH AN AGGREGATE SIZE OF ¾" TO 1½". ALL TOPSOIL, LOOSE FILL, AND DELETERIOUS MATERIALS SHALL BE REMOVED BEFORE PLACING MATERIAL.
9. BACKFILL MATERIAL SHALL BE SCREENED GRAVEL OR SAND, FREE OF DELETERIOUS MATERIAL WITH A MAXIMUM AGGREGATE SIZE OF 1½". BACKFILL SHALL EXTEND FOR A MINIMUM DISTANCE OF 3'-0" BEYOND THE HORIZONTAL LIMITS OF THE STRUCTURE. MATERIAL SHALL BE PLACED IN LIFTS NOT EXCEEDING 12" AND COMPACTED TO NOT LESS THAN 95% OF THE MAXIMUM DENSITY DETERMINED BY ASTM D1557 (MODIFIED PROCTOR TEST). ALL COMPACTION SHALL BE DONE WITH HAND-OPERATED COMPACTION EQUIPMENT.NE WITH HAND-OPERATED COMPACTION EQUIPMENT.
10. SHOP DRAWINGS WERE DEVELOPED USING THE FOLLOWING RESOURCES FOR THE CONTRACT:
    - "Project Design Plan Set". DATED: Month, Year. PREPARED BY: Engineer, Location. PREPARED FOR: Client or contractor.
11. IF THERE IS ADDITIONAL INFORMATION PERTINENT TO THE FABRICATION AND INSTALLATION OF THESE UNITS THAT IS NOT CONTAINED WITHIN THE RESOURCES LISTED ABOVE IT SHALL BE BROUGHT TO THE ATTENTION OF MICHIE CORPORATION. FAILURE TO MAKE SUCH ADDITIONAL INFORMATION AVAILABLE SHALL RELIEVE MICHIE CORPORATION OF ALL LIABILITIES ARISING FROM ERRORS OR OMISSIONS RELATED TO THE OMITTED INFORMATION.

| No. | Date | Revision | By |
|---|---|---|---|
| | | | |

MICHIE CORPORATION
173 BUXTON INDUSTRIAL DRIVE, PO BOX 870
HENNIKER, NH 03242
PHONE: 603-428-3218
FAX: 603-428-7426
WWW.MICHIECORP.COM

Project Name
Project Location
30,000 Gallon Water Cistern
Cistern Plan and Elevations

Scale: AS SHOWN
Checked by:
Drawn by:
Designed by: CFP
Project No. XXXX
Date:

Prepared for:
Michie Corp.

DWG NO.
S1.0

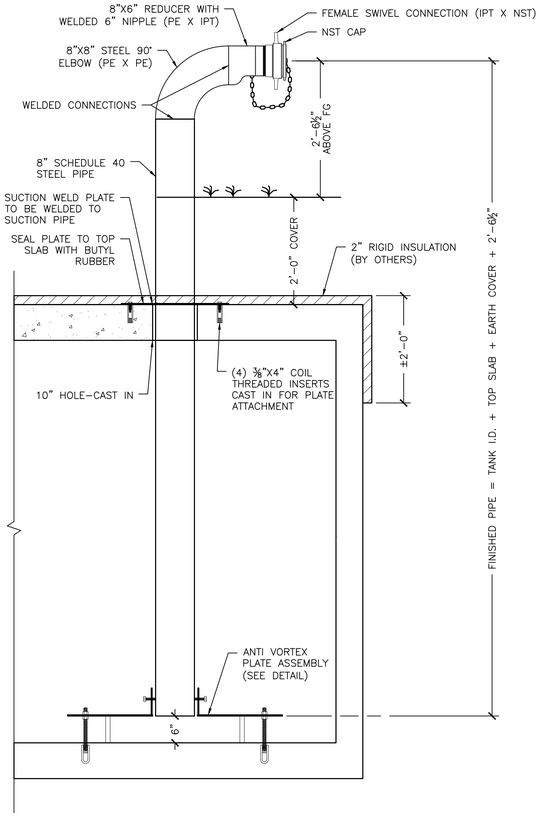


1 S2.0 SUCTION ASSEMBLY DETAIL
¾" = 1'-0"

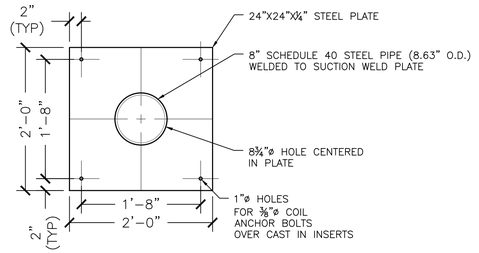


2 S2.0 SUCTION WELD PLATE DETAIL
PLAN VIEW
1" = 1'-0"

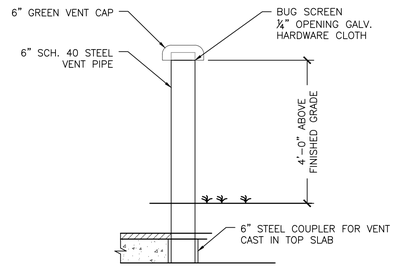


NOTE:
THE BUG SCREEN IS REQUIRED. PLACE SCREEN IN THE VENT PIPE TO FULLY FILL THE PIPE DIAMETER.

3 S2.0 VENT PIPE ASSEMBLY DETAIL
½" = 1'-0"

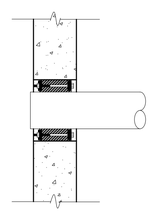

LINK SEALS SHALL BE MODULAR, MECHANICAL TYPE, CONSISTING OF INTER-LOCKING SYNTHETIC RUBBER LINKS SHAPED TO CONSINUOUSLY FILL THE ANNULAR SPACE BETWEEN THE PIPE AND THE WALL OPENING.

MATERIAL PROPERTIES OF LINK SEAL ELASTOMERS MEET OR EXCEED THE APPLICABLE REQUIREMENTS OF THE FOLLOWING ASTM SPECIFICATIONS: D-2240, D-412, S-395 AND D-297.

BOLT AND MATING NUT HAVE A TENSILE STRENGTH OF 74,000 PSI

4 S2.0 TYPICAL LINK SEAL PIPE CONNECTION
¾" = 1'-0"

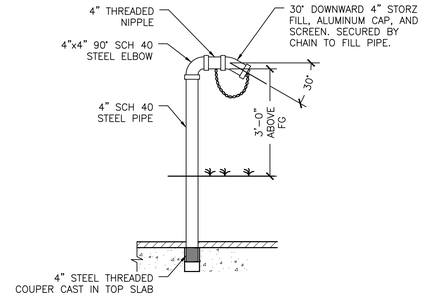


7 S2.0 FILL LINE ASSEMBLY DETAIL
½" = 1'-0"

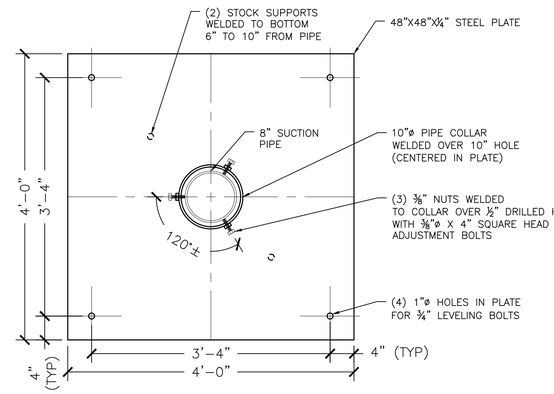


8A S2.0 ANTI VORTEX PLATE DETAIL
PLAN VIEW
1" = 1'-0"

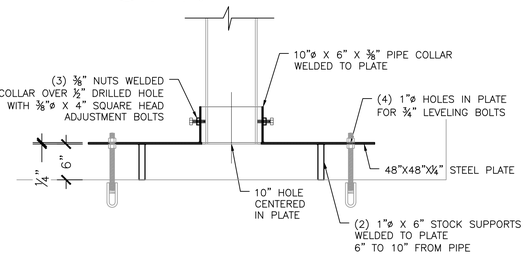


8B S2.0 ANTI VORTEX PLATE DETAIL
ELEVATION VIEW
1" = 1'-0"

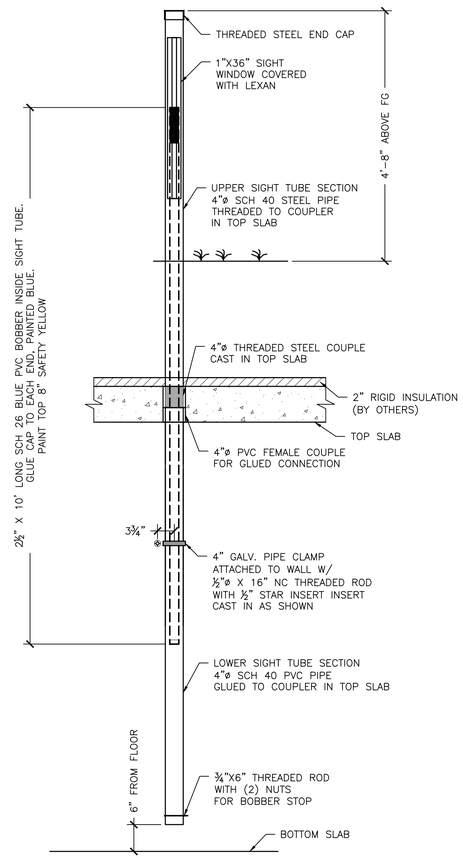


10 S2.0 TYPICAL WATER FLOAT INDICATOR DETAIL
¾" = 1'-0"

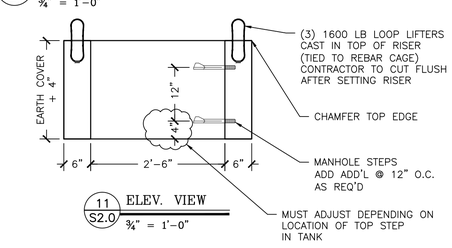


11 S2.0 ELEV. VIEW
¾" = 1'-0"

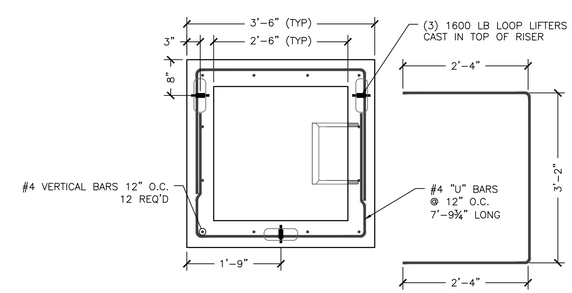


12 S2.0 PLAN VIEW
¾" = 1'-0"

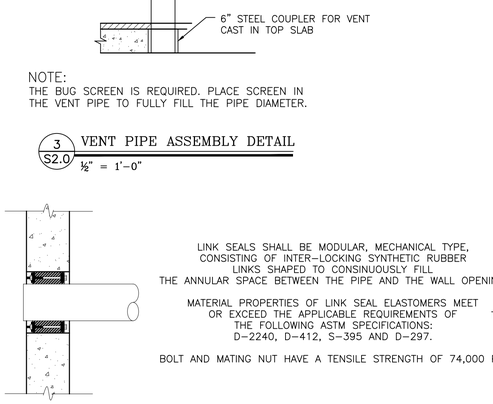


NOTES:
1. CONCRETE: 4,000 PSI @ 28 DAYS.
2. REINFORCING: 60,000 PSI GRADE 60 DEFORMED BLACK BARS.
3. EACH BOLLARD TO WEIGH 750# (0.18 CY).

9 S2.0 POLY SHEATHED PRECAST BOLLARD
½" = 1'-0"




FLEXIBLE SLEEVE PIPE CONNECTION RUBBER ELEMENT SHALL MEET OR EXCEED ALL REQUIREMENTS OF ASTM C-923 FOR "RESILIENT CONNECTORS BETWEEN CONCRETE MANHOLE STRUCTURES & PIPES", AND HAVE A MINIMUM TENSILE STRENGTH OF 2600 PSI.

INTERNAL EXPANSION BAND (S106-16AB W1A) AND EXTERNAL PIPE CLAMPS (80667) SHALL BE CONSTRUCTED OF SERIES 304 AND SERIES 305 NON-MAGNETIC STAINLESS STEEL (TORQUE TO 45 FT/LBS)

5 S2.0 TYPICAL FLEXIBLE SLEEVE PIPE CONNECTION DETAIL
1" = 1'-0"

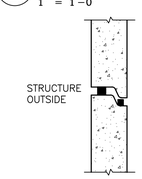


1½" CONSEAL 202 (OUTSIDE)
BUTYL RUBBER JOINT SEALANT SHALL FILL 75% OF JOINT CAVITY. BUTYL RUBBER JOINT SEALANT SHALL MEET OR EXCEED THE REQUIREMENTS OF FEDERAL SPECIFICATION SS-S-210, ASTM C-990 AND AASHTO M-198B

1" CONSEAL 231 (INSIDE)
CONSEAL CS-231 CONTROLLED EXPANSION WATERSTOP SEALANT SHALL MEET OR EXCEED THE REQUIREMENTS OF ASTM SPECIFICATION NUMBERS D-71, D-4, D-6 AND D-217.

6 S2.0 CONSEAL JOINT SEALANT DETAIL
1" = 1'-0"

HALLIDAY PRODUCTS, INC.
ORLANDO, FL
http://www.hallidayproducts.com

HALLIDAY PRODUCTS

MODEL NO. F1R3030M-C-----
QUANTITY:
ORDER NO.
DATE:
LOCATION/TAG:

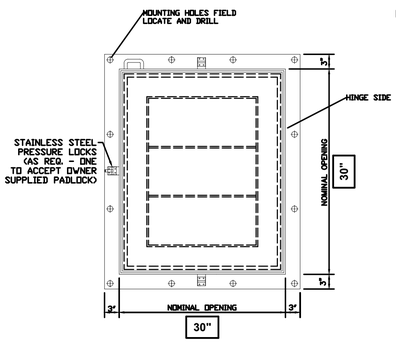


STANDARD FEATURES:
1/4 ALUMINUM TREAD PLATE COVER
1/4 THICK ALUMINUM FRAME EXTRUSION
T-316 STAINLESS STEEL HARDWARE
NEOPRENE GASKET (ON COVER)
S.STL. & ALUM. HOLD OPEN ARM
S.STL PRESSURE LOCKS
LOCKING LUG
LIFETIME GUARANTEE

[X] 625 LB. PER SQ. FT. LOAD RATING

[ ] 300 LB. PER SQ. FT. LOAD RATING

OPTIONS/FEATURES:

- [ ] BITUMINOUS COATING
- [ ] CLEAR ANODIZED FINISH
- [ ] LACQUER FINISH
- [ ] SPRING ASSIST
- [ ] 2" INSULATION W/ CAPTIVE PAN
- [ ] SLAB SKIRTING
- [ ] PVC PROTECTIVE FILM
- [ ] SHOP DRILL MOUNTING HOLES
- [ ] MISCELLANEOUS

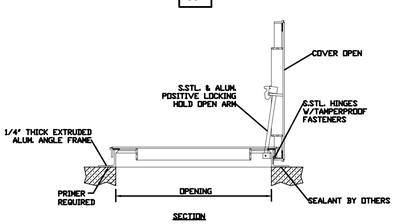


NOTE:
ACTUAL CLEAR OPENING = NOMINAL OPENING - 1.25"

F1_STD 11/4/05

30"x30" RISER TURRET
ITEM NUMBER: 279999
UNIT WEIGHT AND VOLUME:
.22CY/FT (920#/FT)

NOTES:
1. CONCRETE: 4,000 PSI @ 28 DAYS.
2. REINFORCING PER ASTM A-615, GRADE 60 DEFORMED BLACK BARS.

| No. | Date | Revision | By |
|---|---|---|---|
| | | | |

MICHIE CORPORATION
173 BUXTON INDUSTRIAL DRIVE, PO BOX 870
HENNIKER, NH 03242
PHONE: 603-428-3218
FAX: 603-428-7426
WWW.MICHIECORP.COM

Project Name
Project Location
Cistern Misc. Details

Scale: AS SHOWN
Checked by:
Drawn by:
Designed by: CFP
Project No. XXXX
Date:

Prepared for:
*Michie Corp.*

DWG NO.
S2.0

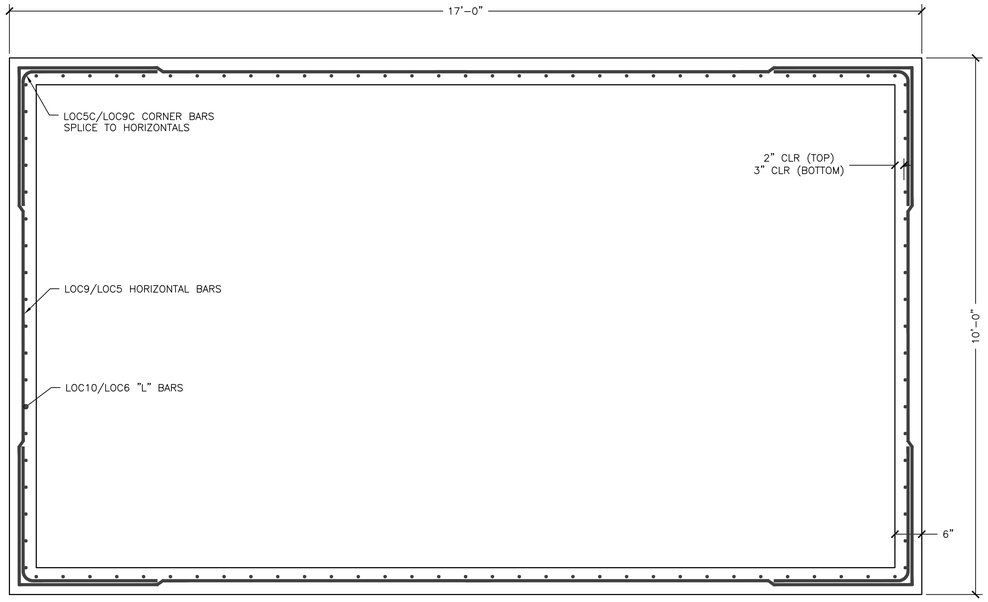


1 S3.0 REINFORCING SECTION (PLAN)
¾" = 1'-0"

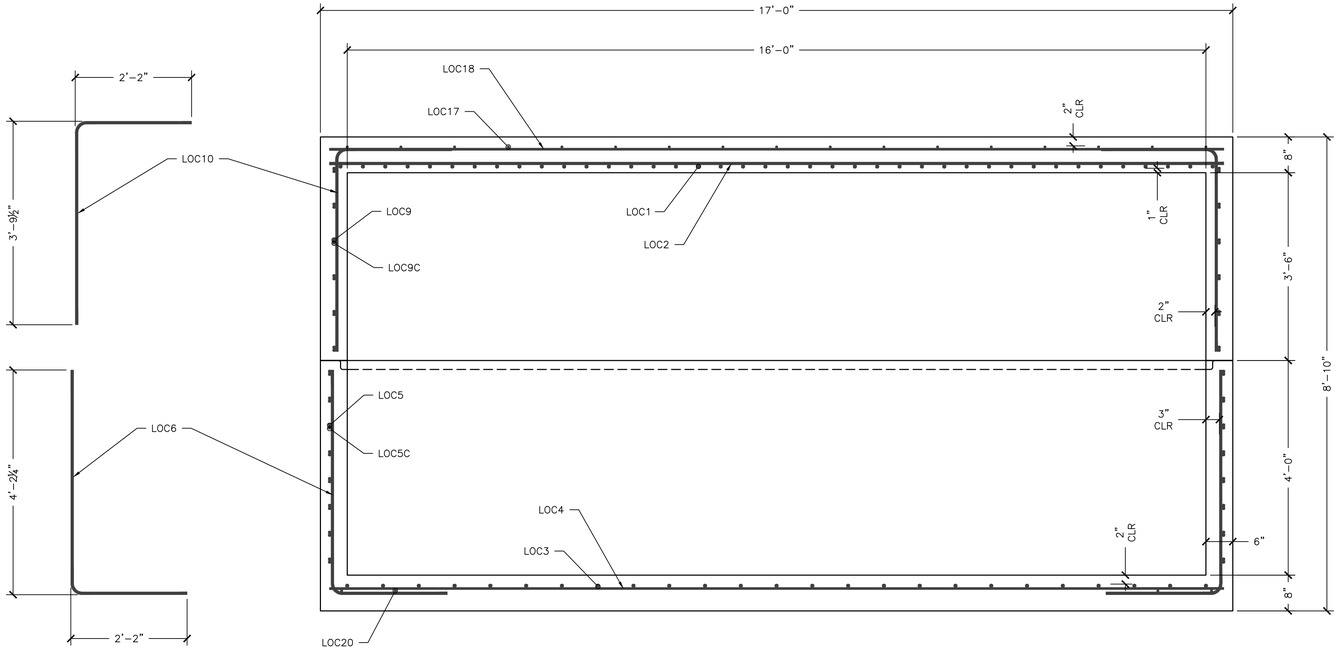


2 S3.0 REINFORCING SECTION (ELEVATION)
¾" = 1'-0"

FOUNDATION & BACKFILL NOTES:

1. FOUNDATION MATERIAL SHALL BE 3/4" CRUSHED STONE, MINIMUM 12" THICK.
2. 1 1/2" BANK RUN GRAVEL SHALL BE USED FOR BACKFILL OPERATIONS SURROUNDING TANK. BACKFILL SHALL BE PLACED IN MAXIMUM 12" LOOSE LIFTS. IT SHALL BE COMPACTED TO 95% OF MAXIMUM DRY DENSITY BY MODIFIED PROCTOR METHOD (ASTM 1557). ALL COMPACTION SHALL BE DONE WITH HAND-OPERATED COMPACTION EQUIPMENT.
3. TANK EXCAVATION SHALL BE KEPT DEWATERED THROUGHOUT INSTALLATION AND BACKFILL OPERATIONS.
4. ALL AREAS BETWEEN TANKS SHALL BE FILLED TO A MINIMUM OF 12" ABOVE CROWN OF INTERCONNECTION PIPE WITH 3/4" CRUSHED STONE. 1 1/2" BANK RUN GRAVEL MAY BE USED ABOVE THIS ELEVATION, PROVIDED THAT PROPER COMPACTION AS STATED IN NOTE 2 ABOVE CAN BE ACHIEVED.
5. ALL BACKFILL MATERIAL BETWEEN TANKS SHALL BE PLACED IN 12" LIFTS AT THE SAME TIME AS THE MATERIAL SURROUND THE TANKS.

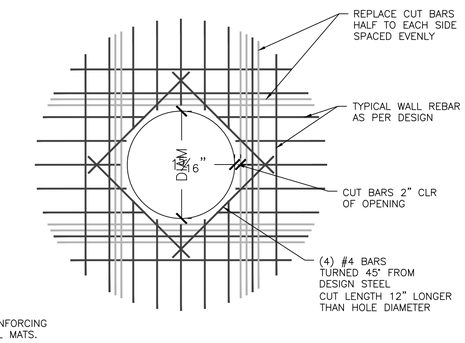


NOTE:
ADDITIONAL REINFORCING
APPLIES TO ALL MATS.

3 S3.0 TYPICAL REINFORCING AT HOLE
¾" = 1'-0"

REINFORCEMENT SCHEDULE

| | MARK | SIZE | BEND | SPACING | LENGTH | QTY | NOTES |
|---|---|---|---|---|---|---|---|
| TOP SECTION | LOC10 | #5 | L | 6" | 5'-10" | 108 | |
| | LOC9 | #5 | STR | 8" | 9'-8" SHORT WALL<br>16'-8" LONG WALL | 6/WALL | |
| | LOC9C | #5 | CORNER | 8" | 26 " X 26" | 6/CORNER | 5'-5 1/4" UNBENT |
| | LOC18 | #4 | STR | 12" | 16'-8" | 10 | EXCLUDES REPLACEMENTS |
| | LOC17 | #4 | STR | 12" | 9'-8" | 17 | EXCLUDES REPLACEMENTS |
| | LOC2 | #5 | STR | 10" | 16'-8" | 12 | EXCLUDES REPLACEMENTS |
| | LOC1 | #6 | STR | 5" | 9'-8" | 40 | EXCLUDES REPLACEMENTS |
| BTM SECTION | LOC6 | #5 | L | 6" | 6'-2 5/8" | 108 | |
| | LOC5 | #5 | STR | 6" | 9'-8" SHORT WALL<br>16'-8" LONG WALL | 8/WALL | |
| | LOC5C | #5 | CORNER | 6" | 26" X 26" | 8/CORNER | |
| | LOC4 | #4 | STR | 6" | 16'-8" | 20 | |
| | LOC3 | #6 | STR | 8" | 9'-8" | 25 | |
| | LOC20 | #4 | STR | 12" | 9'-8" | 4 | SHORT WALLS ONLY |

| No. | Date | Revision | By |
|---|---|---|---|
| | | | |

MICHIE CORPORATION
173 BUXTON INDUSTRIAL DRIVE, PO BOX 870
HENNIKER, NH 03242
PHONE: 603-428-3218
FAX: 603-428-7426
WWW.MICHIECORP.COM

Scale: AS SHOWN
Checked by:
Drawn by:
Designed by: CFP
Date:
Project No. XXXX

**Project Name**
**Project Location**
**Cistern Reinforcing Details**

Prepared for:
*Michie Corp.*

DWG NO.
S3.0