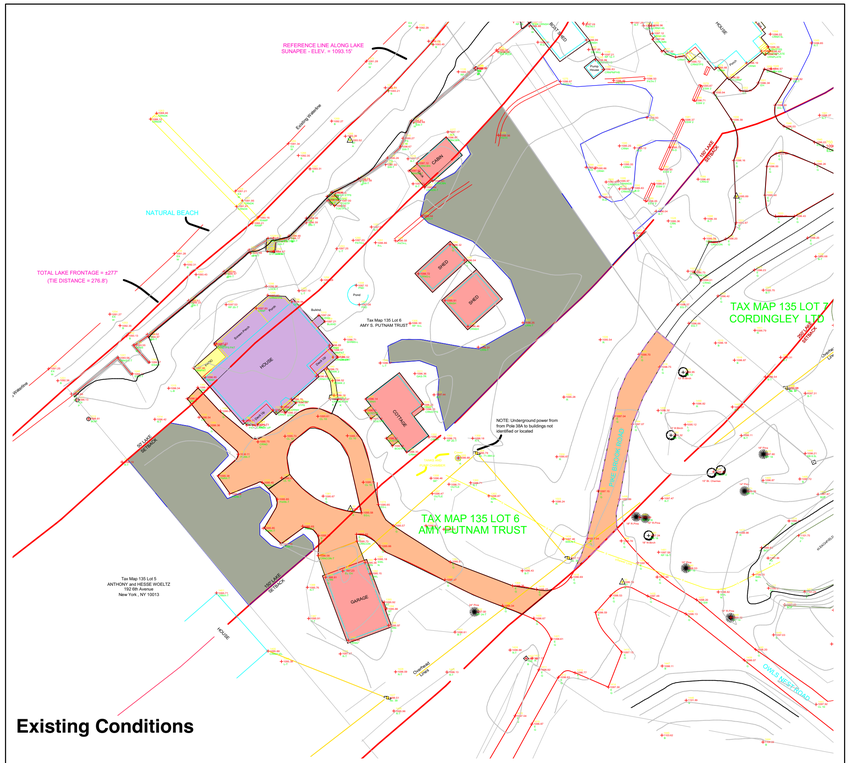

Existing Conditions

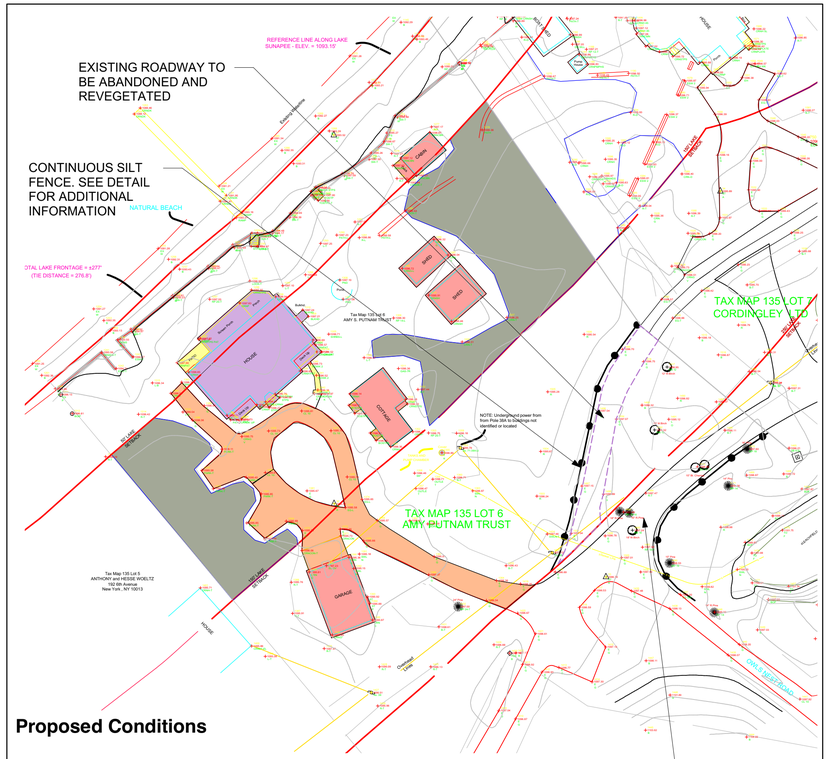

Proposed Conditions

Existing Impervious Area Calculations

	R-50'	50'-150'	150-250'	**Total**
Primary Struct./Deck	750 SF	2,170 SF	0 SF	**2,920 SF**
Patio/Walkway	120 SF	50 SF	0 SF	**170 SF**
Road/Drive	30 SF	2,705 SF	3,260 SF	**5,995 SF**
Walls	500 SF	0 SF	0 SF	**500 SF**
Accessory Structures	290 SF	1,645 SF	950 SF	**2,885 SF**
Total Impervious Area	1,690 SF	6,570 SF	4,210 SF	**12,470 SF**
Total Area	13,740 SF	26,730 SF	26,225 SF	**66,695 SF**
Percent Impervious				**18.7%**

Undisturbed Area Calculation

Total Area Between 50'-150'	26,730 SF
Existing Unaltered Area Between 50'-150'	10,820 SF
Percentage of Unaltered Area Between 50'-150'	40.4%
50% of Woodland Buffer, Less Impervious (Town)	10,080 SF

Proposed Impervious Area Calculations

	R-50'	50'-150'	150-250'	**Total**
Primary Struct./Deck	750 SF	2,170 SF	0 SF	**2,920 SF**
Patio/Walkway	120 SF	50 SF	0 SF	**170 SF**
Road/Drive	30 SF	2,705 SF	1,825 SF	**4,560 SF**
Walls	500 SF	0 SF	0 SF	**500 SF**
Accessory Structures	290 SF	1,645 SF	950 SF	**2,885 SF**
Total Impervious Area	1,690 SF	6,570 SF	2,775 SF	**11,035 SF**
Total Area	13,740 SF	26,730 SF	26,225 SF	**66,695 SF**
Percent Impervious				**16.5%**

Undisturbed Area Calculation

Total Area Between 50'-150'	26,730 SF
Existing Unaltered Area Between 50'-150'	10,820 SF
Percentage of Unaltered Area Between 50'-150' (State)	40.4%
50% of Woodland Buffer, Less Impervious (Town)	10,080 SF

Legend

- Existing Primary Structure
- Existing Drive/Road
- Existing Accessory Structure
- Temporary Impact
- Existing Unaltered Area
- Existing Patio/Walkway
- Proposed Silt Fence

Notes

1. The purpose of this plan is to show the improvements, topography and all site features relating to the NH Shoreland Protection Act. See a 2000 boundary prepared by Bristol-Sweet for the Mary Charles Heirs for all property line details.
2. This plan is the result of a Nikon total station survey, September 29, 2015. This survey was tied to work completed for the Pike Road Revocable Trust, September, 2014.
3. All elevations are referenced to USGS datum (NAVD 1988) tied by GPS survey to NH DOT benchmarks in New London and Sunapee.
4. This property is located in the R-2 Zoning District, subject to the provisions of the Shoreline Overlay District; the required building setbacks are 50' from the high waterline, and 25' from the sidelines.
5. No underground utilities were located as a part of this survey.
6. All wetlands shown were delineated by Jon Sisson, Beaver Tracks LLC, Fall, 2014.
7. The 100 year flood boundary for Lake Sunapee is shown as a Zone AE boundary with a based flood elevation of 1095.0'. All of these lots are shaded as within the flood zone despite the fact that most of the land is above the 1095.0 elevation line. See an approved LOMA Request for the Pike Brook Road properties, Case No.15-01-1289A.

NOTES

- NO ADDITIONAL IMPERVIOUS AREAS WILL BE INTRODUCED WITHIN THE 250' NHDES SETBACK.

- SURVEY INFORMATION BY PENNYROYAL HILL LAND SURVEYING & FORESTRY, CROYDON, NH.

-THIS PLAN SHALL NOT BE CONSTRUED AS A COMPLETE SURVEY OF THE PROPERTY, AND HAS BEEN DEVELOPED SOLELY FOR THE PURPOSE OF THE PBN. FURTHER SURVEY WORK MAY BE NEEDED FOR FUTURE WORK WITHIN THE 250' SHORELAND SETBACK.

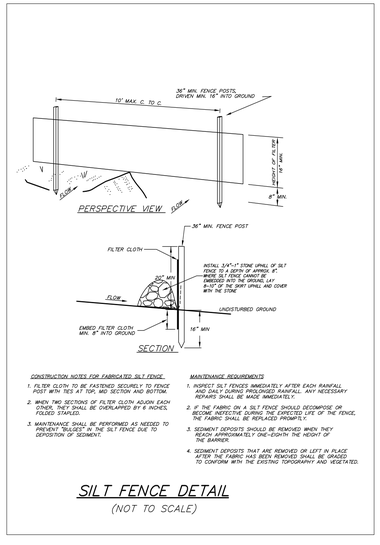

SILT FENCE DETAIL
(NOT TO SCALE)

N

Putnam
150 Pike Brook Road
New London, NH 03257

PELLETTIERI ASSOCIATES, INC.
LANDSCAPE ARCHITECTURE, CONSTRUCTION & FINE GARDENING
168 KEARSARGE MOUNTAIN ROAD · WARNER, NH 03278 · (603)456-3675

Project: Putnam Residence

Title: SWQPA Conditions Plan

Job No.

Scale 1" = 40'

Date 2 Sept '16

Revised 12 Sept '16

Drawn by CGG

SE