A Shoreland Homeowner's Guide to Stormwater Management

~ *protecting your home & environment* ~

NH Department of Environmental Services
29 Hazen Drive, Concord, NH 03301 • 603.271.3503 • www.des.nh.gov

Introduction

The Shoreland Water Quality Protection Act (SWQPA), originally named the Comprehensive Shoreland Protection Act, which was enacted to help protect the state's surface waters, includes limits on development that contribute to stormwater runoff. If you are a shoreland homeowner, your property may produce stormwater runoff that directly impacts the quality of our public waters. However, you can reduce or prevent polluted stormwater runoff. This guide provides several simple and cost effective practices that shoreland homeowners can install to address stormwater runoff from roofs, patios, lawns and driveways. These practices can be used to meet the provisions of the SWQPA. The guide also includes general information about what state environmental permits, if any, are necessary for incorporating these practices.

What is Stormwater Runoff?

Stormwater runoff describes the flow of rainwater or meltwater from snow or ice over the land's surface.

Polluted stormwater runoff flowing into a storm drain.

On undisturbed sites, much of the stormwater is intercepted by natural ground cover or is absorbed into the ground. Land clearing and development reduces the capacity of the land to absorb rainwater and snowmelt, which leads to more water flowing over the land and into surface waters.

As water flows over the land, it picks up exposed soil as well as any chemicals, fertilizers or pollutants that are present. Stormwater carries these polluting substances over impervious surfaces and through storm drains and drainage ditches. Impervious surfaces are surfaces that cannot effectively absorb and infiltrate water. Examples of impervious surfaces include, but are not limited to, roofs, decks, patios and paved, gravel or crushed stone driveways, parking areas and walkways unless designed to effectively absorb and infiltrate water. This flow of stormwater eventually reaches a body of water, where the sediments, nutrients and pollutants are deposited.

10 in One!

Please note that this document is actually 10 articles in one: an introductory document and nine guidance sheets, which may be printed out altogether or separately. They are:

- Introductory Document, 4 pg.
- Dripline Trench, 1 pg.
- Drywells, 1 pg.
- Infiltration Steps - New, 2 pg.
- Infiltration Steps - Retrofit, 1 pg.
- Infiltration Trench, 1 pg.
- Paths & Walkways, 1 pg.
- Rain Barrels, 1 pg.
- Rain Gardens, 1 pg.
- Water Bars, 2 pg.

Alteration of Terrain Permits

The Alteration of Terrain (AoT) permit protects New Hampshire surface waters, drinking water supplies, and groundwater by controlling soil erosion and managing stormwater runoff from developed areas. This permitting program applies to earth moving operations, such as industrial, commercial, and residential developments as well as sand pits, gravel pits, and rock quarries.

Permits are issued by DES after a technical review of the application, which includes the project plans and supporting documents. An AoT permit is required whenever a project proposes to disturb more than 100,000 square feet of contiguous terrain (50,000 square feet, if any portion of the project is within the Protected Shoreland) or disturbs an area having a grade of 25 percent or greater within 50 feet of any surface water. In addition to these larger disturbances, the AoT General Permit by Rule applies to smaller sites.

To determine if an AoT permit may be necessary for the work that you plan to conduct, contact the AoT Program at (603) 271-3434. For more information, please click on the program's name in the "A to Z List" at www.des.nh.gov.

American Recovery and Reinvestment Act

NHRECOVERY

Funding provided by the American Recovery and Reinvestment Act under Section 604(b) of the Clean Water Act. Guidance sheets used with permission from the Maine Department of Environmental Protection.

NHDES-WD-10-8

How Does Stormwater Runoff Affect Surface Waters?

As stormwater flows overland as runoff, it picks up and carries a load of sediment, nutrients and pollutants. The faster and more concentrated the flow, the greater the load that stormwater runoff can carry.

Stormwater runoff from developed areas may carry pollutants such as exposed soil, sediment and organic matter; chemicals, fertilizers and herbicides from lawns; animal wastes, cigarette butts and other litter; road salt, chemicals and oil from paved surfaces; and grass clippings, leaves and other yard waste. Stormwater carries these substances through pipes, drains and ditches and eventually into lakes, ponds, rivers and streams. Stormwater slows down after entering a waterbody and deposits the load of nutrients, bacteria, toxic substances, sediment, and other pollutants into the surface water.

Stormwater runoff can cause water quality declines in the following ways:

1. NUTRIENTS: Runoff from fertilized lawns, landscaped yards and agricultural fields into waterbodies contributes large quantities of nutrients to waterbodies. Sewer systems as well as pet and wildlife waste can also contribute excess nutrients. These nutrients accelerate algal and cyanobacteria blooms and fuel the increased growth of aquatic plants, which promotes declines in water clarity and dissolved oxygen which can impact aquatic species and cold water fisheries in particular.

2. BACTERIA: Bacteria from human and animal waste can contaminate surface waters and lead to beach closures, shellfish bed closures and other measures to protect public health.

3. TOXIC SUBSTANCES: Industrial and agricultural pollutants, including ammonia, metals, organic compounds, pesticides, nitrates and salts, can harm wildlife and also pose a contamination threat for groundwater and public drinking water supplies.

4. SEDIMENT: Heavy loads of eroded sediment deposited into waterbodies can smother aquatic habitat, decrease water clarity, increase water temperature and cause the depletion of dissolved oxygen in the water column.

Protecting Water Quality through the Shoreland Water Quality Protection Act

The Shoreland Water Quality Protection Act (SWQPA), RSA 483-B, was enacted to protect the water quality of New Hampshire's surface waters by managing the disturbance of shoreland areas. To reduce the transport of nutrients, sediments and other pollutants into the State's surface waters, the SWQPA seeks to maintain a shoreland buffer of natural vegetation to protect against the potentially harmful effects of stormwater runoff.

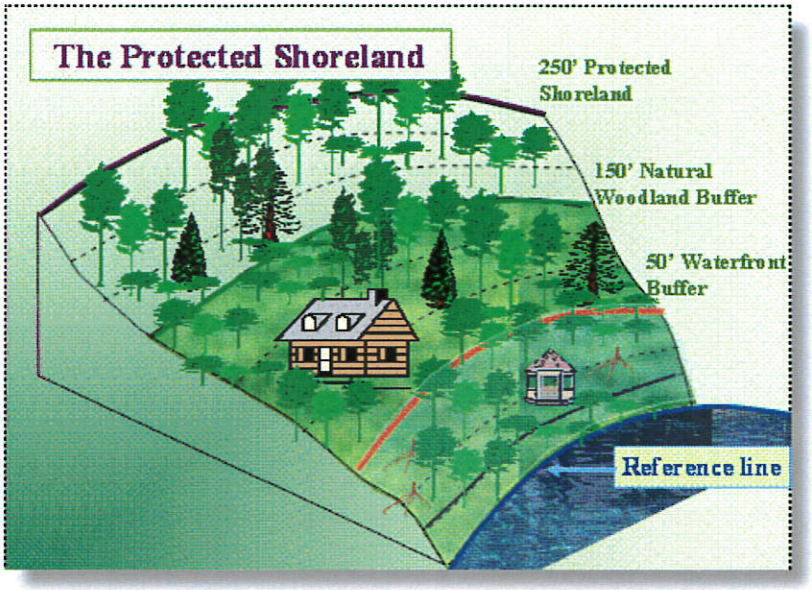

The SWQPA applies to all fourth order and greater streams, designated rivers, tidal waters and lakes, ponds and impoundments over 10 acres in size. DES maintains an inventory of these waterbodies in the Consolidated List of Water Bodies subject to RSA 483-B, which may be found at http://des.nh.gov/organization/divisions/water/wetlands/cspa/water_bodies.htm.

Around these waterbodies, the SWQPA applies to development and land use activities within 250 feet of the water's edge or high water mark, called the reference line. This area is referred to as the "Protected Shoreland." Within the Protected Shoreland, the SWQPA requires:

- A waterfront buffer with minimal disturbance to natural vegetation and natural groundcover within 50 feet of the Reference Line.
- A natural woodland buffer retaining a certain percentage of vegetation in an unaltered state between 50 and 150 feet of the Reference Line.
- Limitations on impervious surfaces, lot subdivision, excavation and filling within 250 feet of the Reference Line.

According to the SWQPA, lots within the Protected Shoreland may exceed 20 percent impervious area only when a stormwater management system is implemented and maintained to effectively absorb and infiltrate the post-construction stormwater that would occur as a result of the new impervious surfaces. A "stormwater management system" includes stormwater treatment practices, stormwater conveyances and groundwater recharge practices. Property owners or developers may exceed 30 percent impervious area only when a stormwater management plan is certified by a licensed engineer to not concentrate stormwater or contribute to erosion.

Wetlands Permits

If you plan to conduct work in the state's surface waters or in the bank of a lake, pond or river, you need to secure a Wetlands Permit prior to starting the activity. The bank is the transitional slope immediately adjacent to the edge of a surface water body, the upper limit of which is usually defined by a break in slope. RSA 482-A authorizes DES to protect wetlands and surface waters by requiring a permit for dredge, fill or construction in wetlands and waterbodies. A Wetlands Permit is required for any alteration of tidal or non-tidal wetlands. Permits are issued by the Wetlands Bureau after a technical review of the application and confirmation that the proposed activities meet the statutory requirements. The applicant must demonstrate that potential impacts have been avoided to the maximum extent practicable and that any unavoidable impacts have been minimized. Impacts that are specifically covered by a Wetlands Permit or a Wetlands Permit by Notification will not need a Shoreland Permit.

Most of the small-scale stormwater management structures included in this guide would be installed above the top of the bank; however, if you plan to install infiltration steps or a path or walkway, these structures may be installed in the bank.

To determine if your plan requires a Wetlands Permit, contact the Wetlands Program at (603) 271-2147, or click on the program's name in the "A to Z List" at www.des.nh.gov.

Shoreland Permits

The DES Shoreland Program implements RSA 483-B, the Comprehensive Shoreland Protection Act (SWQPA). The SWQPA establishes minimum standards for activities within the Protected Shoreland that are designated to protect the water quality of the state's larger water bodies and to fulfill the state's role as a trustee of those waters. The Shoreland Program provides multiple services to the public. Permitting staff review shoreland permit, waiver and variance requests for compliance with the SWQPA. The review process is designed to provide a level of oversight for construction, fill and excavation activities to ensure that projects are carried out in a manner that protects water quality.

New construction or construction that modifies the footprint of existing impervious surfaces on a lot within the protected shoreland, using mechanized equipment to either excavate, remove or form a cavity within the ground within the protected shoreland and filling any area within the protected shoreland with rocks, soil, gravel or sand requires a shoreland permit. None of the practices included in this guide would require a permit if they are installed using hand tools and are located above the bank of the lake or river.

To determine if your work plan will require a Shoreland Permit, contact the Shoreland Program at (603) 271-2147 or shoreland@des.nh.gov. For more information, please click on the program's name in the "A to Z List" at www.des.nh.gov.

When to Use Stormwater Management Practices

If you plan to expand existing structures, construct new structures or develop a previously undeveloped lot within the Protected Shoreland, employing the stormwater management practices included in this guide may be an effective means of satisfying the statutory requirement for projects that exceed certain impervious area thresholds. For example, if a property owner wishes to construct a new garage and upon completion of the project the total impervious area of the lot within the Protected Shoreland exceeds 20 percent, the SWQPA requires the implementation of a stormwater management system. The management system must be constructed and maintained to allow the infiltration of stormwater that would result from the additional impervious area.

It is important to note that many of the stormwater practices discussed in this guide such as the walkways and infiltration trenches are considered pervious surfaces and are not taken into consideration when calculating the total impervious area of the lot within the Protected Shoreland.

For new or undeveloped parcels, the practices described within this guide can be installed so as to not exceed the 20 percent and 30 percent impervious surface area thresholds, or they could be used in a stormwater management system thereby allowing the subject lot to exceed 20 percent or 30 percent of impervious area.

What Permits are Necessary?

When planning to install one of the stormwater management practices described in this guide, homeowners should consult with their municipal planning department, building inspector or code enforcement officer to determine if local permits are necessary.

At the state level, there are three DES programs with overlapping jurisdictions, the Alteration of Terrain Program (AoT) (RSA 485-A:17), the Wetlands Program (RSA 482-A), and the Shoreland Program (RSA 483-B). See side bars for information on permits.

This document was prepared by the DES Shoreland Protection Program and the Lakes Management and Protection Program in partnership with the Upper Valley Lake Sunapee Regional Planning Commission.

DRIPLINE TRENCH

~ managing roof runoff on homes without gutters ~

Purpose

Dripline trenches collect and infiltrate stormwater, and control erosive runoff from the rooftop. The trenches collect roof runoff and store it until it soaks into the soil. These systems also minimize wear on your house by reducing back splash.

Also known as a roof dripline trench and an infiltration trench.

Materials

Crushed stone and non-woven geotextile fabric. Other geotextiles, including landscaping weed barrier, can be substituted for smaller projects.

Installation

1. Dig a trench that is 18″ wide and at least 8″ deep along the drip line. Slope the bottom away from the house so that water will drain away from the foundation. Make sure to dispose of the soil in a flat area where it cannot be washed into lakes and streams. The front and sides of the trench may be edged with stone or with pressure-treated lumber to hold the stones in place.

2. Extend the life of the dripline trench by lining the sides with non-woven geotextile fabric.

3. Fill the trench with ½″ -1½″ crushed stone and to within 3″ of the ground level. Fold a flap of non-woven geotextile fabric over the top of the trench and top off with additional stone.

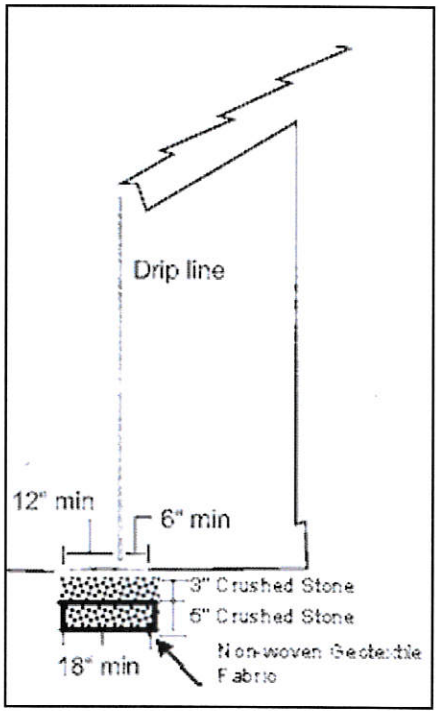

Note: Dripline trenches work best in sand and gravel soils that can quickly disperse a large volume of water. They should not be used on structures with improperly sealed foundations, as flooding may result.

Maintenance

To maintain these structures, periodically remove accumulated debris and weeds from the surface. Trenches lined with non-woven geotextile fabric will require less frequent maintenance, however, they will still clog over time and the stone will need to be removed and washed to clean out the accumulated sediment and debris.

NEW HAMPSHIRE DEPARTMENT OF Environmental Services

Look for more homeowner guidance to stormwater management online at www.des.nh.gov.

Funding provided by the American Recovery and Reinvestment Act under Section 604(b) of the Clean Water Act. Guidance sheets used with permission from the Maine Department of Environmental Protection.

DRYWELLS
~ managing roof runoff on homes with gutters ~

Purpose

Drywells collect and infiltrate runoff at gutter downspouts and other places where large quantities of concentrated water flow off rooftops. These systems help control erosive runoff on your property, and reduce wear on your house by minimizing back splash.

Materials

Crushed stone and non-woven geotextile fabric. Other geotextiles, including landscaping weed barrier, can be substituted for smaller projects.

Installation

1. Drywells should measure about 3′ x 3′ x 3′, be lined with non-woven geotextile fabric and back-filled with 1/2″ to 1½″ crushed stone.

2. Slope the bottom of the drywell away from the house so that water does not drain towards the foundation. Make sure to dispose of the removed soil in areas where it will not wash into lakes and streams.

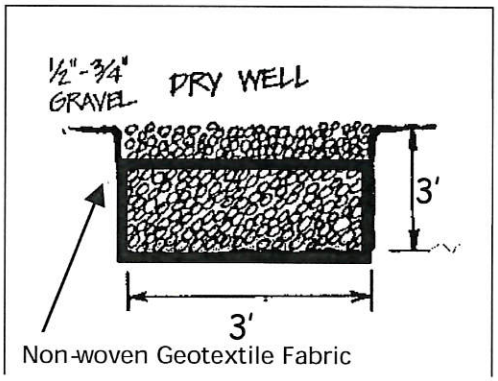

3. Extend the life of the dry well by lining the sides with non-woven geotextile fabric and filling to within 3″ of the ground level with stone. Fold a flap of filter fabric over the top of the dry well and top off with additional stone.

4. Direct gutter downspout to the drywell.

Note: Drywells work best in sand and gravelly soils that can quickly disperse a large volume of water. They should not be used on structures with improperly sealed foundations, as flooding may result. If flooding is of concern, place the drywell 6′ away from the base of the foundation.

Maintenance

To maintain these structures, periodically remove accumulated debris and weeds from the surface. Non-woven geotextile fabric will extend the life of these structures, however, they will eventually clog over time and the stone will need to be removed and washed to clean out the accumulated sediment and debris.

New Hampshire Department of Environmental Services

Look for more homeowner guidance to stormwater management online at www.des.nh.gov.

Funding provided by the American Recovery and Reinvestment Act under Section 604(b) of the Clean Water Act. Guidance sheets used with permission from the Maine Department of Environmental Protection.

INFILTRATION STEPS – new

~ controlling erosion on steep paths ~

Purpose

Infiltration steps use crushed stone to slow down and infiltrate runoff; they're built with timbers and filled with crushed stone or pea stone. They are effective on moderate slopes, but consider building wooden stairways on 1:1 slopes (45°) or areas where rocks or surface roots make it difficult to set infiltration steps in the ground.

Materials

Crushed stone and pea stone; non-woven geotextile fabric. Other geotextiles, including landscaping weed barrier, can be substituted for smaller projects. Pressure treated timbers, cedar landscape timbers and steel rebar.

New Hampshire Department of Environmental Services

Look for more homeowner guidance to stormwater management online at www.des.nh.gov.

Funding provided by the American Recovery and Reinvestment Act under Section 604(b) of the Clean Water Act. Guidance sheets used with permission from the Maine Department of Environmental Protection.

Installation

1. Calculate the Rise and Run of Each Step

First, measure the overall rise and run of your steps in inches. The step height is determined by the 6" thickness of the timber. Divide the rise by 6 and round off to the nearest whole number to determine the number of steps. Divide the run by the number of steps to determine step width. A comfortable width will be at least 15".

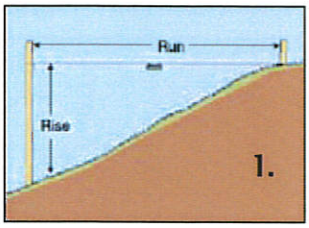

2. Stake Out the Steps

Figure out the step width. A 4' width is comfortable for one person. Paths must be no more than 6' wide in the waterfront buffer. Drive stakes at each corner of the stairway and stretch string between them to outline the steps. Spray paint or sprinkle sand or flour on the ground to mark the outline.

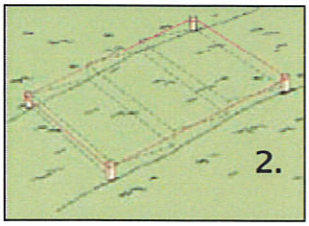

3. Excavate the First Step

Starting at the bottom, dig a trench for the first timber (this will be little more than a shallow groove in the ground). Next, dig trenches for the side timbers, which need to be long enough to extend 6" past the next step's riser. Check to make sure the trenches are level.

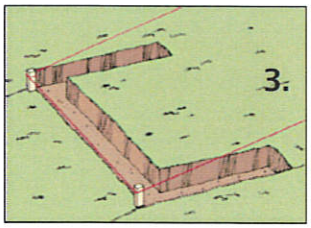

Note: Infiltration steps may not require side timbers, especially if the steps are in an eroded pathway where the surrounding land is higher. In this case, extend the timbers into the adjacent banks so water will not go around the steps.

4. Cut the Timbers

Cut the riser timber to length, then measure and cut the side timbers. Drill ½" diameter holes 6" from the ends of each timber. Position the step, then remove or add soil as needed to level it. Anchor the step by driving 18" long pieces of ½" diameter steel rebar through the holes and into the ground. Make sure the rebar is flush or slightly recessed since the edges may be sharp. Set the side timbers in place, and level and anchor them.

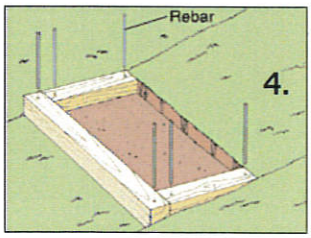

Continued on back

INFILTRATION STEPS - new
~ continued ~

Shovel out the soil inside the step to create a surface roughly level with the bottom of the timbers. Additional soil can be removed to provide more area for infiltration. Make sure to dispose of excavated soil in a place where it will not wash into lakes or streams.

5. Build the Next Step

Measure from the front of the first riser to precisely locate the second riser. Dig a trench for the riser, and trench back into the hill for the sides, as before. Set the riser roughly in place with the ends resting on the side timbers below. The riser is attached to the side timbers below it with 12" galvanized spikes. Drill a pilot hole about 5" into the riser, and spike the riser into the side timbers below. Set the side timbers, drill ½" holes and pound in 18" rebar pieces into the ground as with the first step.

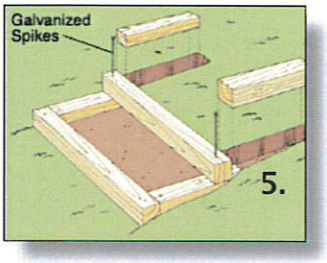

Excavate between the sides, as before. Continue up the hillside in this fashion. When installing the top step, cut the side timbers 6" shorter than the ones on the lower steps - these timbers do not need the extra length since no stairs will rest on them.

6. Lay Down Geotextile Fabric and Backfill with Stone

Line the area inside each set of timbers with non-woven geotextile fabric. This felt-like fabric will allow water to percolate through but will separate the stone from the underlying soil. Make sure the fabric is long enough to extend a few inches up the sides of the timbers.

Fill each step with ¾" crushed stone or pea stone until it is about 1" below the top of the timber. This lip will break up water flow and encourage infiltration. Pea stone is comfortable for bare feet but may be more expensive and more difficult to find. Paving stones can also be set into crushed stone to provide a smooth surface for bare feet - as long as ample crushed stone is exposed to allow infiltration.

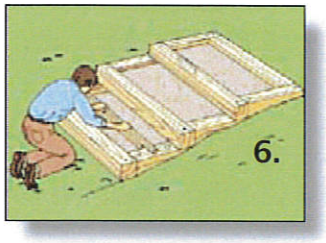

Seed and/or mulch bare soil adjacent to the steps. Planting areas adjacent to the steps with shrubs and groundcover plants soften the edges and help prevent erosion.

Maintenance

Replace rotten timbers. If the crushed stone or pea stone becomes filled up with sediment over time, remove, clean out sediment and replace.

INFILTRATION STEPS – retrofit

~ retrofitting steps to control erosion on paths ~

Purpose

Infiltration steps use crushed stone to slow down and infiltrate runoff. They are effective on moderate slopes, but consider building wooden stairways on 1:1 slopes (45°) or areas where rocks or surface roots make it difficult to set infiltration steps into the ground.

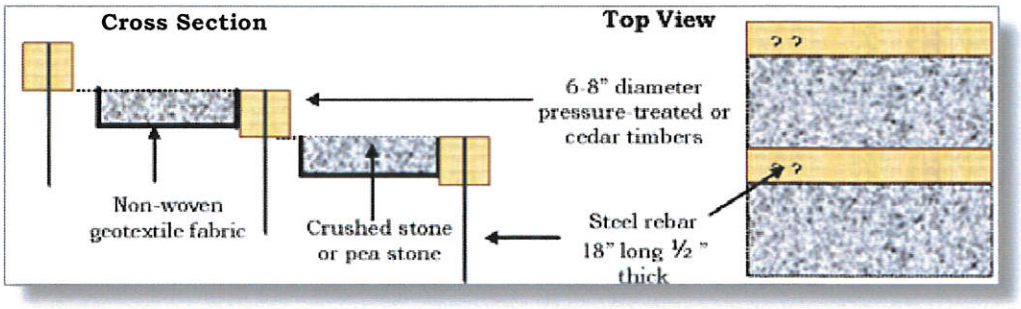

Materials

Crushed stone and pea stone can be purchased from gravel pits. Other geotextiles, including landscaping weed barrier, can be substituted for smaller projects. Pressure treated timbers, cedar landscape timbers and steel rebar can be purchased from lumber and hardware stores. Some stores will cut rebar to the specified length for a small fee. Otherwise, rebar can be cut with a hack saw.

Installation

Infiltration steps are steps built with timbers and backfilled with crushed stone or pea stone to help water soak into the ground. Many existing timber steps can be retrofitted to create infiltration steps by making the following changes.

1. Remove several inches of soil from behind each step. Dispose of excavated soil in a place where it will not wash into lakes or streams.

2. Line the bottom and sides of the excavated area with non-woven geotextile fabric. This felt-like fabric allows water to infiltrate but will separate the stone from the underlying soil.

3. Backfill the hole with washed ¾" crushed stone or pea stone so that the tread is level or it just slightly slopes up to meet the above step. Pea stone is comfortable on bare feet but also usually more expensive. Paving stones can also be set into crushed stone to provide a smooth surface for bare feet - as long as ample crushed stone is exposed to allow infiltration.

4. If the timbers are not firmly secured, drill ½" diameter holes, 6" from the ends of each timber. Drive ½" diameter, 18" long steel rebar through the holes with a sledge hammer. For gentle slopes, wooden stakes or large rocks can also secure the timbers.

Maintenance

Replace rotten timbers. If the crushed stone or pea stone becomes filled up with sediment over time, remove, clean out sediment and replace.

New Hampshire Department of Environmental Services

Look for more homeowner guidance to stormwater management online at www.des.nh.gov.

Funding provided by the American Recovery and Reinvestment Act under Section 604(b) of the Clean Water Act. Guidance sheets used with permission from the Maine Department of Environmental Protection.

INFILTRATION TRENCH
~ managing runoff from rooftops & paved areas ~

Purpose

Infiltration trenches collect and infiltrate runoff from paved driveways, rooftops and other areas, and work best in well-drained soils like sands and gravels. Also, they can only effectively handle smaller rainfall events, so are not well suited for areas that receive large amounts of sediment (e.g., gravel driveways) as they will fill in quickly.

Materials

Crushed stone can be purchased at your local gravel pit. Contact your local Soil and Water Conservation District for suppliers of non-woven geotextile fabric. Other geotextiles, including landscaping weed barrier, can be substituted for smaller projects.

Installation

1. Dig a trench that is 18″ wide and at least 8″ deep. Make sure to dispose of the soil in a flat area where it cannot be washed into lakes or streams. The front and sides of the trench may be edged with stone or lumber to hold the stones in place.

2. Extend the life of the infiltration trench by lining the sides with non-woven geotextile fabric.

3. Fill to within 3″ of the ground level with ½″ to 1½″ crushed stone.

4. Fold a flap of non-woven geotextile fabric over the top of the trench and top off with additional stone.

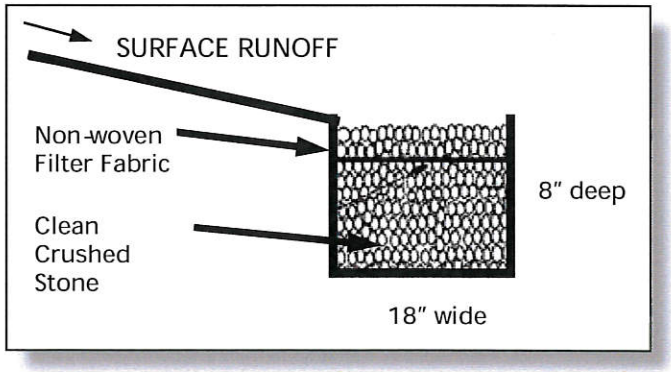

Maintenance

To maintain these structures, periodically remove accumulated debris and weeds from the surface. Non-woven geotextile fabric will extend the life of these structures, however, they will eventually clog over time and the stone will need to be removed and washed to clean out the accumulated sediment and debris.

New Hampshire Department of Environmental Services

Look for more homeowner guidance to stormwater management online at www.des.nh.gov.

Funding provided by the American Recovery and Reinvestment Act under Section 604(b) of the Clean Water Act. Guidance sheets used with permission from the Maine Department of Environmental Protection.

PATHS & WALKWAYS

~ managing foot traffic for lake protection ~

Purpose

Properly designed pathways direct foot traffic, absorb water, reduce the rate of flow, and protect soil. Pathways can also reduce the potential for erosion, and minimize the amount of pollutants flowing from your property into local streams and lakes.

Materials

A mix of wood fibers, soil and gravel, which holds up to runoff and has a natural look. One option for pathway materials includes setting stepping stones into a crushed stone base. The crushed stone allows runoff to infiltrate, and the stepping stones are comfortable for bare feet.

Installation

Install narrow, meandering pathways in high-use areas. Reroute paths that go directly down steep slopes or install steps or water bars to break up the slope.

- Ideally, paths should be no more than 3'-4' wide. In the waterfront buffer, new paths can be no more than 6' wide.
- The walking surface should be covered with 3"-4" of material such as an erosion control mix, pine needles, bark mulch, crushed stone, wood chips, or other material. This will define the path, guide foot traffic, and reduce soil erosion.
- Paths should be meandering, depending on the slope, to provide opportunities for runoff to disperse into adjacent vegetation.
- New paths can be clearly marked with strategic plantings, stones, solar lights, etc. along the edges.
- Install water bar "speed bumps" to break up the slope and keep water from concentrating on a pathway. Fill behind with crushed stone to help runoff soak into the ground and direct water into vegetated areas. Extend logs or timbers past the outside edge of both sides of the path and install at a 30-degree angle. Secure the water bar with large stones on the downhill side and/or pound in with pieces of rebar steel.

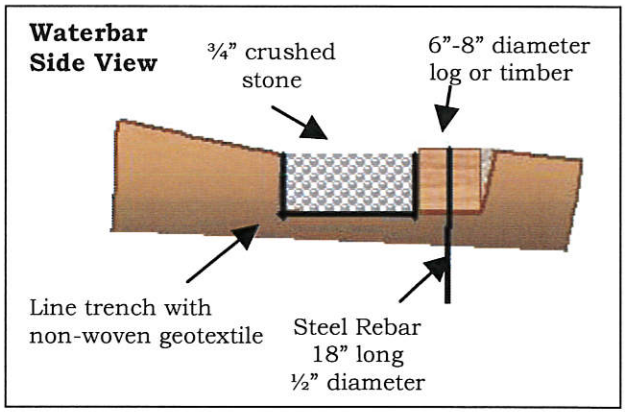

Maintenance

To maintain these structures, periodically remove accumulated debris from the surface. Mulched pathways may need to be re-shaped and additional material may be needed to replace what has washed or worn away. Using non-woven geotextile fabric below stone pathways will extend their life.

New Hampshire Department of Environmental Services

Look for more homeowner guidance to stormwater management online at www.des.nh.gov.

Funding provided by the American Recovery and Reinvestment Act under Section 604(b) of the Clean Water Act. Guidance sheets used with permission from the Maine Department of Environmental Protection.

RAIN BARRELS

~ managing roof runoff in your backyard ~

Purpose

Rain barrels provide an innovative way to capture rainwater from your roof, and store it for later use. Water collected from rain barrels can be used to water lawns, gardens and indoor plants. This water would otherwise run off your roof or through downspouts and become stormwater, picking up pollutants on its way to a storm drain, stream or lake. You can lower your water bill, conserve well water in the dry season, and reduce polluted stormwater runoff.

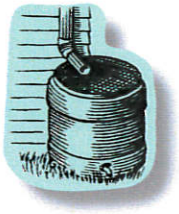

Materials

Rain barrels are available in many sizes and styles, and range in price from $80 to over $200. Contact your local hardware store, garden center or nursery, or order a rain barrel on-line.

Building your own rain barrel is usually the least expensive option. Several web sites exist with material lists and clear directions.

Finally, you can simply use an open barrel to collect rainwater. However, you should use the water within two weeks before mosquitoes have an opportunity to hatch.

Installation

1. Place rain barrel on a level surface. If you have gutters, place the rain barrel beneath the downspout so the water flows onto the screen on top of the barrel. You may need to have your downspout cut to an appropriate height above your rain barrel. If you do not have gutters, find a location where water concentrates from your roof and place the rain barrel where it will capture this steady stream of water during rain storms.

2. Elevate your rain barrel by placing it on cinder blocks or a sturdy wooden frame. Raising the barrel allows the barrel to drain properly, and you can easily fit a watering can underneath the spout or attach a hose to the spout. Soaker hoses attached to rain barrels will slowly release water into gardens and recharge groundwater.

Maintenance

Gutters and downspouts should be clean of debris. Leaves and pine needles can clog gutters and prevent water from reaching the rain barrel. Furthermore, check the screen on the rain barrel after each storm event and remove debris that has plugged the screen.

Freezing water can damage your barrel. Rain barrels should be drained and stored before freezing weather sets in to prevent ice damage. They can be stored outside if they are turned upside down and the faucet is covered. Be sure to put something heavy on your rain barrel so it doesn't roll away. Rain barrels can also be stored inside a garage or other protected area.

New Hampshire Department of Environmental Services

Look for more homeowner guidance to stormwater management online at www.des.nh.gov.

Funding provided by the American Recovery and Reinvestment Act under Section 604(b) of the Clean Water Act. Guidance sheets used with permission from the Maine Department of Environmental Protection.

WATER BARS
~ diverting water off paths and trails ~

Purpose

A water bar intercepts water traveling down footpaths, trails and other areas and diverts it into stable vegetated areas.

Materials

Fallen rot-resistant timbers can often be found on site. Pressure treated timbers, cedar landscape timbers and steel rebar can be purchased from lumber and hardware stores.

Contact your local soil and water conservation district for suppliers of non-woven geotextile fabric. Other geotextiles, including landscaping weed barrier, can be substituted for smaller projects.

Installation

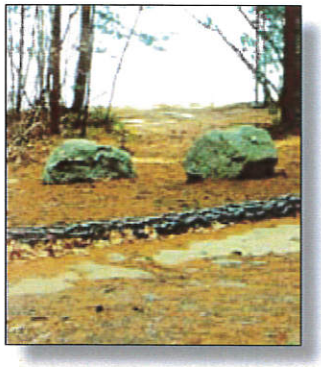

Install water bars on moderately steep paths with concentrated flows. Select a location where the water bar outlet can drain to a stable, vegetated area. Install multiple water bars as needed and space closer together on steeper slopes as directed in Table 1.

Any rot-resistant type of wood, such as cedar, spruce, fir or hemlock logs can be used. For logs, the diameter should be at least 8″ at the small end. 6″ to 8″ diameter, pressure treated or cedar timbers can also be used. The length should extend past the edge of the path on both sides. Install water bars as follows:

Table 1. Water Bar Spacing

% Grade	Spacing Between Water Bars (in feet)
2	250
5	130
10	80
15	50
25+	40

1. Dig the trench – Dig a trench for the wood that is a 30° angle across the path. Be sure the trench and the water bar extends off both sides of the path. The trench should be deep enough so the top of the log will be almost flush with the trail on its downhill side once in place. Soil and rock excavated from the trench should be heaped on the trail below the water bar to be used later as backfill.

2. Install the log or timber – Place the log or timber in the trench. The log should fit snugly in the trench with no high point or voids under the log. Secure the water bar with large stones, rebar pins or wooden stakes. If using stones, partially bury on downhill side. If using rebar, drill ½″ holes 6″ in from each edge and pound in 18″ pieces of ½″ rebar so that the rebar is flush or slightly recessed with the top.

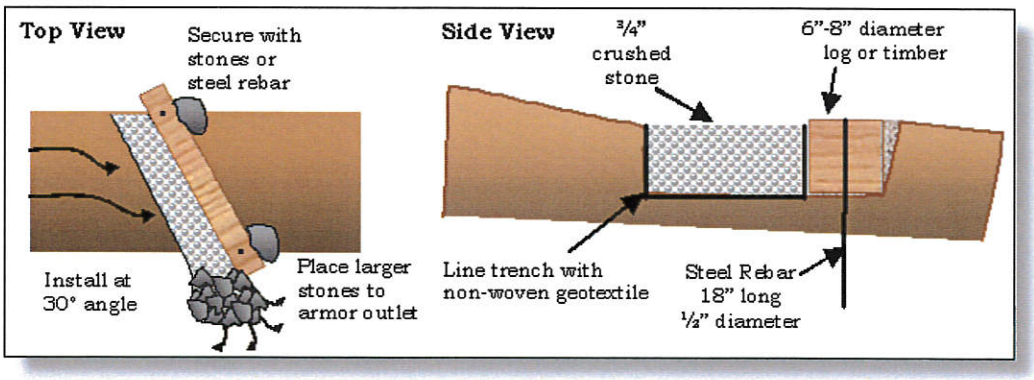

Look for more homeowner guidance to stormwater management online at www.des.nh.gov.

Funding provided by the American Recovery and Reinvestment Act under Section 604(b) of the Clean Water Act. Guidance sheets used with permission from the Maine Department of Environmental Protection.

WATER BARS
~ continued ~

3. Backfill around the water bar – Dig a 12″ wide and 6″ deep trench along the uphill side of the bar. Fill the trench with crushed stone, leaving a few inches of the timber exposed. Place a flared apron of stones to armor the water bar outlet. Pack soil and gravel up against the downhill side of the water bar so that the top of it is flush with the trail. Cover all disturbed soil with seed and mulch or leaf litter.

Maintenance

Water bars should be checked periodically and after storm events to ensure that material is not eroding behind the structure or at the outlet. Any needed repairs should be made as soon as possible. Periodically remove accumulated leaves and debris from behind the water bar.

RAIN GARDENS

~ managing roof runoff in your backyard ~

Purpose

Rain gardens are attractive and functional landscaped areas that are designed to capture and filter stormwater from roofs, driveways, and other hard surfaces. They collect water in bowl-shaped, vegetated areas, and allow it to slowly soak into the ground. This reduces the potential for erosion and minimizes the amount of pollutants flowing from your lawn into streams and lakes.

Materials

Mulches and erosion control mix are available from local garden centers. Native plants can be purchased from your local nursery; select species that thrive in wet soil.

Installation

Rain gardens sizing depends on the area draining to the garden. To calculate the area needed for your rain garden:

1. Determine the size of the drainage area.

2. Determine the type of soil at the rain garden site:
   - Sandy soil – very gritty; does not roll into a ball
   - Silty soil – smooth and fine; does not roll into a ball
   - Clay soil – very fine, sticky when wet; rolls into a ball

3. Multiply the drainage area by the soil sizing factor listed below:

   Sandy soil – 0.03; Silty soil – 0.06; Clay soil – 0.10. The resulting number is the area needed for your rain garden.

Designing

The garden should be bowl-shaped, with the lowest point of the garden no more than 6" below the surrounding land.

The sides should be gently sloping towards the center to prevent sudden drop-offs that could lead to erosion problems or walking hazards. Rain gardens are often placed in a pre-existing or created depression within a lawn, or in a location that receives roof runoff from a downspout.

To avoid flooding improperly sealed foundations, build your rain garden 10' away from existing structures, and direct water into the garden with a grassy swale, infiltration trench, gutter extension or other device.

Rain gardens can be placed in sunny or shady regions of your lawn, but plants should be chosen accordingly, with the lowest point planted with wet-tolerant species, the sides closest to the center planted with moist-tolerant species, and the edges of the rain garden should be planted with sub-xeric (moist to dry) or xeric (dry) tolerant plants. After construction of the garden is complete, the entire area should be covered with a thick layer of mulch, preferably an erosion control mix.

Maintenance

Please note that fertilizer use is restricted within the Protected Shoreland. Fertilizer cannot be used within 25 feet of the reference line. From 25 feet to 250 feet, low phosphate, slow release nitrogen fertilizer may be used on vegetated areas.

New Hampshire Department of Environmental Services

Look for more homeowner guidance to stormwater management online at www.des.nh.gov.

Funding provided by the American Recovery and Reinvestment Act under Section 604(b) of the Clean Water Act. Guidance sheets used with permission from the Maine Department of Environmental Protection.