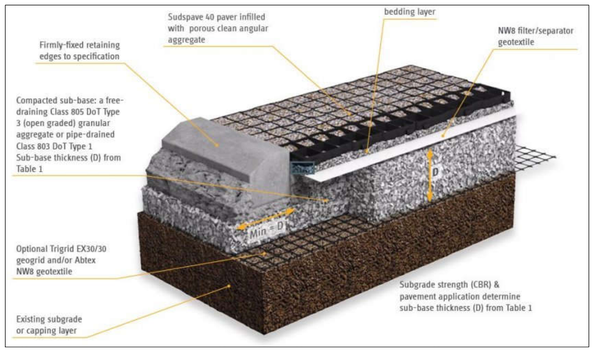

GRID TYPE PERVIOUS DRIVEWAY DETAIL

N.T.S.

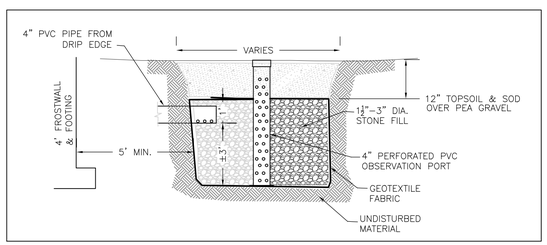

DRYWELL DETAIL

N.T.S.

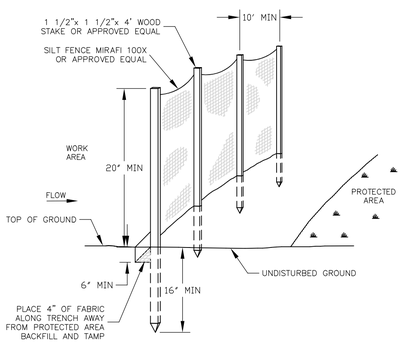

SILT FENCE BARRIER

N.T.S.

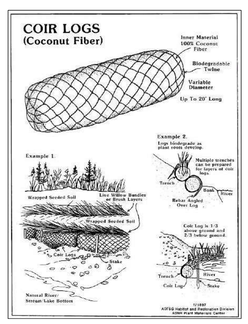

COIR LOG DETAIL

N.T.S.

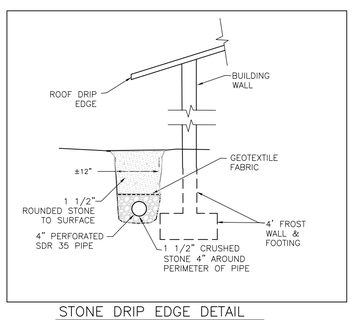

STONE DRIP EDGE DETAIL

N.T.S.

LEGEND

- PROPERTY LINE
- BLDG SETBACK LINE
- LAKE REFERENCE LINE
- REFERENCE SETBACK LINE
- EXISTING BUILDING FOOTPRINT
- PROPOSED BUILDING FOOTPRINT
- SF — PROPOSED SILT FENCE
- COIR — PROPOSED COIR LOG
- PROPOSED IMPERVIOUS AREAS
- PROPOSED PERVIOUS DRIVEWAY ± 325 S.F.

PROPOSED IMPERVIOUS AREA CALCULATION

TOTAL LOT AREA:	±8465 S.F.
IMPERVIOUS AREAS:	
HOUSE, DECK, GAR.	±2120 S.F.
2120 S.F./8465 S.F.=	25.0%

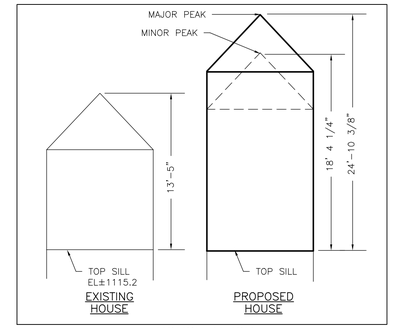

HOUSE HEIGHT

NOT TO SCALE

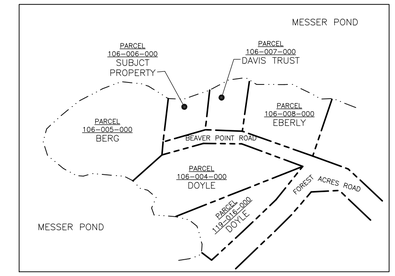

200' ABUTTER PLAN

NOT TO SCALE

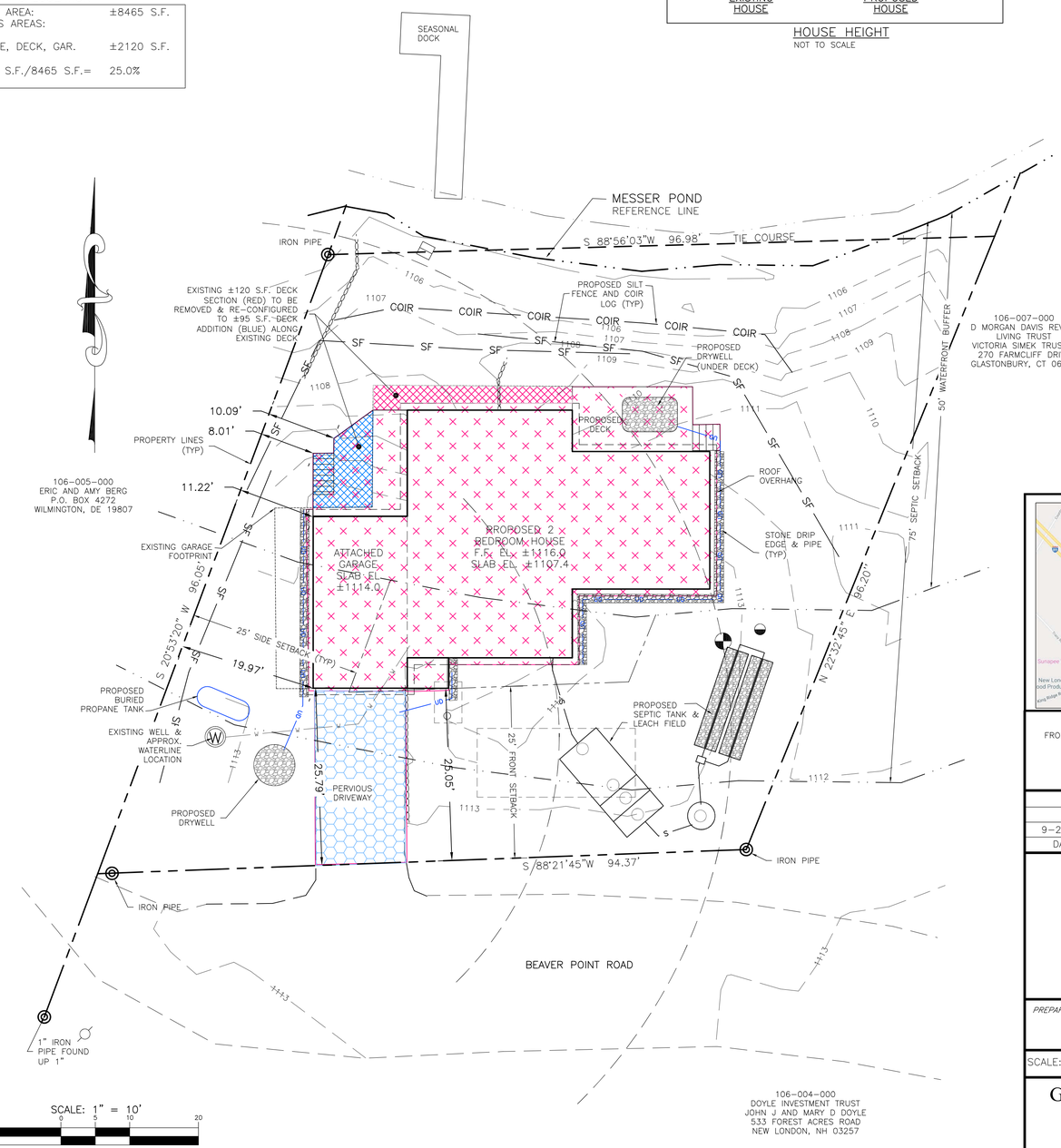

NOTES:

1. OWNER OF RECORD:
   DONNA LYNN WEAVER
   38 BEAVER POINT ROAD
   NEW LONDON, NH 03257
2. TAX MAP 106 LOT 6, NEW LONDON, NH
   LOT AREA: ±0.18 ACRES
   MCRD BK. 3567 PG. 2070

   PARCEL IS IN RESIDENTIAL R-2 & SHORELAND OVERLAY DISTRICTS.
   FRONT SETBACK 25'
   SIDE SETBACK 25'
   LAKE SETBACK 50'
3. BOUNDARY LINES SHOWN ON THIS PLAN ARE BASED ON PLAN ENTITLED "BOUNDARY PLAN DONNA LYNN WEAVER, 38 BEAVER POINT TAX MAP 106 LOT 6 NEW LONDON, NH" PREPARED BY HORIZONS ENGINEERING, DATED SEPT. 19, 2020.
4. NHDES SHORELAND APPROVAL #2020-1400 DATED JULY 6, 2010.
   NHDES SUBSURFACE APPROVAL #eCA 2020082504 DATED AUGUST 25, 2020.

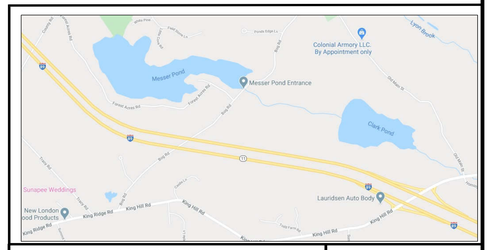

DIRECTIONS TO SITE:

FROM

DATE	REVISION
9-28-20	ADD BOUNDARY, BLDG. TIES, MISC.

TAX MAP 106 LOT 6
38 BEAVER POINT ROAD
NEW LONDON, NH

ZONING HEARING PLAN

PREPARED FOR: DONNA WEAVER
38 BEAVER POINT ROAD
NEW LONDON, NH 03257

SCALE: 1" = 10'	DATE: 7-20-2020	PROJ. NO. 19-193	SHEET 1 of 1

GREENLINE PROPERTY SERVICES, LLC
54 NORTH ROAD SUNAPEE, NH
greenline@myfairpoint.net
603-304-8338